科威納COVNA®

科威納工业自动化有限公司

科威納·连通全球 COVNA CONNECTING THE WORLD

中国科威納总部 **COVNA Headquarters**

中国•东莞 东城区汉塘街26号龙昌微创园C栋
Building C,Longchang Weichuangyuan, No.26 Hantang Street,
Dongcheng District,Dongguan City,China,523106
邮箱 E-mail: Bond@covna-china.com
电话 Tel:86-0769-22456666/22763199
传真 Fax:86-0769-22825120
www.covna-valve.com
www.china-covna.com

中文首页　　英文首页

专注于过程自动化解决方案
Focus on process automation solutions

科威納·连通全球
COVNA CONNECTING THE WORLD

ISO9001 CE RoHS SGS FDA EAC

ABOUT US
关于我们

COVNA 科威纳集团有限公司。总部位于美国科罗拉多州丹佛市，是一家集研发、设计、销售、服务于一体，专业生产自动化控制的调节阀、气动阀、电动阀、电磁阀等流通控制及自动化设备配件，COVNA科威纳作为世界工业提供服务的主要供应商之一，拥有许多赫赫有名的企业和闻名遐迩的品牌。目前，科威纳产品远销100个多国家与地区，广泛应用于自动化、环保、水处理、石油、天然气、化工、电力、冶金、船舶、采矿、造纸、医药、工业系统等十几个行业及领域。

全球技术和客户服务是COVNA科威纳公司的重要组成部分。COVNA科威纳独立拥有技术研发中心，在同行业中率先通过TS（压力管道元件制造许可证）、防爆电气生产许可证、CE（欧盟安全标识）、TÜV（德国莱茵认证）、 SGS（国际公认的检验、鉴定、测试和认证机构）等质量体系和特种行业要求的认证体系，并通过有40+项核心发明、设计专利，其自动化解决方案满足全球质量标准。

通过值得信赖的品牌组合，COVNA科威纳提供的流体管理解决方案套件，为世界各地的社区提供重要的基础设施。与客户合作，COVNA科威纳帮助他们维持自动化安全运转，最大限度地提供运作效率，提高产品使用性能，与客户共同创造更加可持续发展的人类未来。

2017年
荣获高新技术企业

2024年
荣获专精特新企业

50+
核心专利

20+
多国安全认证

100+
服务多国客户

100+
优秀团队人员

全力以赴
打造百年企业
Witnessing a Century

我们不仅拥有强大的产品力、创新力、领先的智能制造力和完善的服务力，更是凭借着强硬的技术和生产实力，成为国内外客户首选阀门品牌。

至今科威纳COVNA产品客户遍布全球120个国家和地区，满足全球客户需求，提供个性化的阀门解决方案。

展望未来，科威纳公司的扩建与深耕，有助于加强与国际先进企业的合作与交流，引进先进的技术和管理经验，不断提升自身的核心竞争力，以应对日益激烈的市场竞争。

科威纳自动化阀门市场的发展优势在于其深厚的产业基础和持续的创新能力。温州阀门产业历史悠久，企业众多，已经形成了较为完善的产业链和供应链体系。

此外，温州阀门企业在技术研发、生产工艺、品牌建设等方面具有一定的优势，能够不断推出高品质、高性能的自动化阀门产品，满足市场的多样化需求。

德国蔡司三坐标测量机
Three coordinate measuring machine

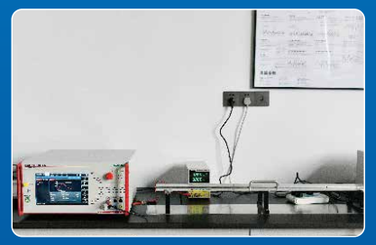

脉冲群发生器
Pulse group generator

高精密气密性测试机
High precision air tightness test machine

恒温恒湿试验箱
Constant temperature and humidity test chamberi

精密型盐雾试验机
Precision salt spray test machine

静电放电发生器
Electrostatic discharge generator

为客户提供
优质服务
Quality Service

COVNA科威纳是一家集研发、设计、销售、服务于一体，专业生产自动化控制的调节阀、气动阀、电动阀、电磁阀等流通控制及自动化设备配件技术型生产商。技术和客户服务是COVNA科威纳公司的重要组成部分。作为世界工业提供服务的主要供应商之一，我们与客户紧密合作，共同推动自动化工业的安全、高效运转，为可持续发展贡献力量。

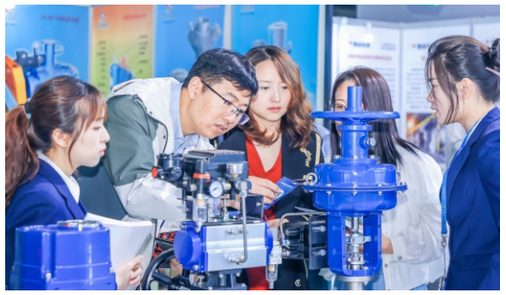

COVNA科威纳始终坚持技术创新，秉承工匠精神，致力于提升“智能制造”与“精益品质”，为自动化工业提供高效的智能阀门管理和维护方案，从而提高阀门的使用效率和可靠性。

公司口号“选择科威纳就是选择安全”充分展现对产品质量的自信和对客户安全的承诺。

科威納COVNA®

A20执行器型号识别
A20 actuator model

A20-***-**-A
不带手动 不带指示窗口
No indicator &
manual override

A20-***-**-B
带手动 带指示窗口
With indicator &
manual override

A20-***-**-C
不带手动 带指示窗口
Indicator only

电动阀命名规则
Naming scheme for electric ball valve

A100 T32 S2 C

执行器型号
Actuator model
A20
A100
A150
A550
B150
E20/E22(电池款 Battery power)

控制类型
Control type
T:开关型（on/off type）
M:调节型（Modulating type）
S:定时开关型（Timer drain type）
L:LoRa无线型（Lora wireless control）

阀体尺寸
Valve size
DN8 ,DN10 ,DN15
DN20,DN25 ,DN32
DN40,DN50,DN65
DN80

手动和指示
Manual override & Indicator
A:不带手动 不带指示窗口
A:No indicator &manual override

B:带手动 带指示窗口
B:With indicator &manual override

C:不带手动 带指示窗口
C:Indicator only

阀体通道
valve body channel
2通道（2 way）
3通道（3 way）

阀体材质
Valve material
B:黄铜 (Brass)
S:不锈钢 (Stainless steel)
P:UPVC （UPVC or PPE）
N:黄铜镀镍（ Nickel plated brass ）

手动功能使用说明:

1.手动功能只能在阀门电源断电的情况下使用。
2.提起手动旋钮,确定旋转方向,尖头“O”方向为开阀,尖头“S”方向关阀,观察指示标到位后,需停止转动。
3.手动操作后必需按下手轮，否则会损坏齿轮。

Manual operation instruction:

1.The manual function can only use in the power failure situation
2.Lift the manual knob and confirm the direction of rotation. The valve is opened in the direction of “O" and closed in the direction of "S". Stop rotating after observing the indication mark in place.
3.Press the handwheel after manual operation ,otherwise the gear will be damaged.

手动使用示意图
Manual operation instruction

A20-T Series 2 Way Brass Electric Ball Valve A20-T系列两通黄铜电动球阀

T20-B2-A

T20-B2-B

T20-B2-C

Technical Parameters 技术参数:

Product size 口径	NPT/BSP 1/4" 3/8" 1/2" 3/4" 1" 1 1/4"（Optional）
Maximum working pressure 最大工作压力	1.0 MPa
Circulation medium 介质	Fluid, air
Working voltage 额定电压	DC5V DC12V DC24V AC/DC9-24V
Wiring diagram 接线图	CR201 CR202 CR301 CR302 CR303 CR304 CR305 CR306 CR501 CR502 CR701 CR702 CR703 CR705 CR706（Optional）
Working current 工作电流	≤500mA
Open/close time 开关时间	≤5S
Life time 寿命	70000 times（testing pressure is 0.4MPa,medium is water)
Valve body material 阀材质	Brass
Actuator material 执行器材质	PPO
Sealing material 密封材料	FKM&PTFE
Actuator rotation 执行器旋转角度	90°
Torque force 扭力	3 N.m
Cable length 线长	0.5m,1.5m（Optional)
Environment temperature 环境温度	-15℃～50℃
Liquid temperature 液体温度	2℃～90℃
Manual override 手动功能	Yes No (Optional)
Open/close indicator 开关指示	Yes No (Optional)
Protection class 防护等级	IP67

Assemble Diagram 组装图

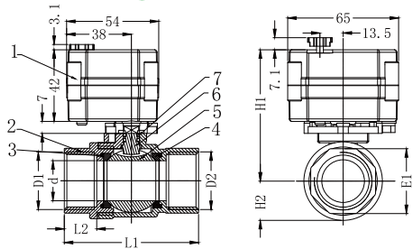

Components 组成

No.	Name	Material	Specification	Quantity
1	Actuator	PPO		1
2	Valve Body	Brass		1
3	O-ring	FKM		2
4	Valve Seat	PTFE		2
5	Ball	stainless steel	304	1
6	Valve Stem	Brass		1
7	O-ring	FKM		2

DESCRIPTION	D1/D2	d±0.3	L1±1	L2±1	E1±0.5	H1±1	H2
8-B2-B	1/4"	8	50	12	20.5	67.5	12
10-B2-B	3/8"	10	50	12	20.5	67.5	12
15-B2-B	1/2"	15	57	12	25	71	16
20-B2-B	3/4"	20	65.5	15	31	74.5/76	19
25-B2-B	1"	23.5	71.5	16	38	76.5	22
32-B2-B	1 1/4"	25	80	18	46	78	25
32-B2-B	1 1/4"	29	80	15	46	93	27

科威納COVNA®

A20-T Series 2 Way Brass Electric Ball Valve(AC/DC110-230V)

A20-T系列两通黄铜电动球阀

Technical Parameters 技术参数:

Product size 口径	NPT/BSP 1/4" 3/8" 1/2" 3/4" 1" 1 1/4"（Optional）
Maximum working pressure 最大工作压力	1.0 MPa
Circulation medium 介质	Fluid, air
Working voltage 额定电压	AC/DC110-230V
Wiring diagram 接线图	CR202 CR301CR303 CR305 CR306 CR401 CR502 CR702 CR703 CR704 CR705 CR706(Optional)
Working current 工作电流	≤500mA
Open/close time 开关时间	≤5S
Life time 寿命	70000 times（testing pressure is 0.4MPa,medium is water)
Valve body material 阀材质	Brass
Actuator material 执行器材质	PPO
Sealing material 密封材料	FKM & PTFE
Actuator rotation 执行器旋转角度	90°
Torque force 扭力	3 N.m
Cable length 线长	0.5m,1.5m（Optional)
Environment temperature 环境温度	-15℃～50℃
Liquid temperature 液体温度	2℃～90℃
Manual override 手动功能	Yes No（Optional)
Open/close indicator 开关指示	Yes
Protection class 防护等级	IP67

T20-B2-C

Assemble Diagram 组装图

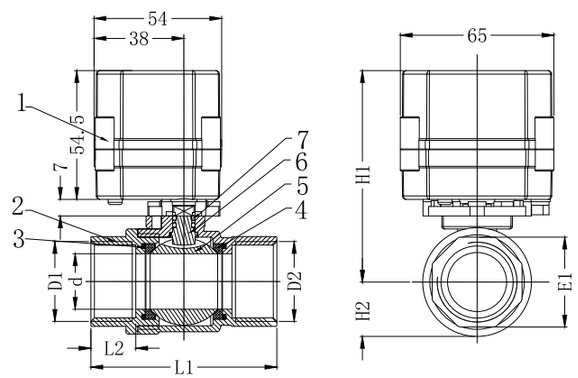

Components 组成

No.	Name	Material	Specification	Quantity
1	Actuator	PPO		1
2	Valve Body	Brass		1
3	O-ring	FKM		2
4	Valve Seat	PTFE		2
5	Ball	SS304		1
6	Valve Stem	Brass		1
7	O-ring	FKM		2

DESCRIPTION	D1/D2	d±0.3	L1±1	L2±1	E1±0.5	H1±1	H2
8-B2-C	1/4"	8	50	12	20.5	80	12
10-B2-C	3/8"	10	50	12	20.5	80	12
15-B2-C	1/2"	15	57	12	25	83.5	16
20-B2-C	3/4"	20	65.5	15	31	87/88.5	19
25-B2-C	1"	23.5	71.5	16	38	89	22
32-B2-C	1 1/4"	25	80	18	46	90.5	25
32-B2-C	1 1/4"	29	80	15	46	105.5	27

A20-T Series 2 Way SS304 Electric Ball Valve A20-T系列两通不锈钢电动球阀

T25-S2-A

T25-S2-B

T25-S2-C

Technical Parameters技术参数:

Valve size 口径	NPT/BSP 1/4" 3/8" 1/2" 3/4" 1"（Optional）
Maximum working pressure 最大工作压力	1.0 MPa
Circulation medium 介质	Fluid, air
Working voltage 额定电压	DC5V DC12V DC24V AC/DC9-24V(Optional)
Wiring diagram 接线图	CR201 CR202 CR301 CR302 CR303 CR304 CR305 CR306 CR501 CR502 CR701 CR702 CR703 CR705 CR706(Optional)
Working current 工作电流	≤500mA
Open/close time 开关时间	≤5S
Life time 寿命	70000 times（testing pressure is 0.4MPa,medium is water)
Valve body material 阀材质	SS304 SS316
Actuator material 执行器材质	PPO
Sealing material 密封材料	FKM & PTFE
Actuator rotation 执行器旋转角度	90°
Torque force 扭力	3 N.m
Cable length 线长	0.5m,1.5m（Optional）
Environment temperature 环境温度	-15℃~50℃
Liquid temperature 液体温度	2℃~90℃
Manual override 手动功能	Yes No(Optional)
Open/close indicator 开关指示	Yes No(Optional)
Protection class 防护等级	IP67

Assemble Diagram 组装图

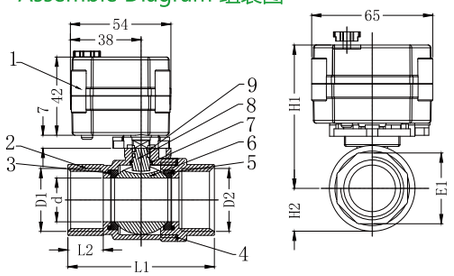

Components 组成

No.	Name	Material	Specification	Quantity
1	Actuator	PPO		1
2	Valve Body	Stainless Steel	304	1
3	O-ring	FKM		2
4	Sealing Gasket	PTFE		1
5	Valve Seat	PTFE		2
6	Ball	Stainless Steel	304	1
7	Gasket	PTFE		1
8	Valve Stem	Stainless Steel	304	1
9	O-ring	FKM		2

DESCRIPTION	D1/D2	d±0.3	L1±1	L2±1	E1±0.5	H1±1	H2
8-S2-B	1/4''	10	51	12	21	70	14
10-S2-B	3/8''	10	51	12	21	70	14
15-S2-B	1/2''	15	62	14	25	72	17
20-S2-B	3/4''	20	72	17	31	75.5	20
25-S2-B	1''	25	79	18	38	78.5	24.5

科威納COVNA®

A20-T Series 2 Way SS304 Electric Ball Valve(AC/DC110-230V)
A20-T系列两通不锈钢电动球阀

Technical Parameters 技术参数:

Valve size 口径	NPT/BSP 1/4" 3/8" 1/2" 3/4" 1"（Optional）
Maximum working pressure 最大工作压力	1.0 MPa
Circulation medium 介质	Fluid, air
Working voltage 额定电压	AC/DC110-230V
Wiring diagram 接线图	CR202 CR301 CR303 CR305 CR306 CR401 CR502 CR702 CR703 CR704 CR705 CR706(Optional)
Working current 工作电流	≤500mA
Open/close time 开关时间	≤5S
Life time 寿命	70000 times（testing pressure is 0.4MPa,medium is water)
Valve body material 阀材质	SS304 SS316
Actuator material 执行器材质	PPO
Sealing material 密封材料	FKM & PTFE
Actuator rotation 执行器旋转角度	90°
Torque force 扭力	3 N.m
Cable length 线长	0.5m,1.5m（Optional）
Environment temperature 环境温度	-15℃~50℃
Liquid temperature 液体温度	2℃~90℃
Manual override 手动功能	Yes No（Optional）
Open/close indicator 开关指示	Yes
Protection class 防护等级	IP67

T20-S2-C

Assemble Diagram 组装图

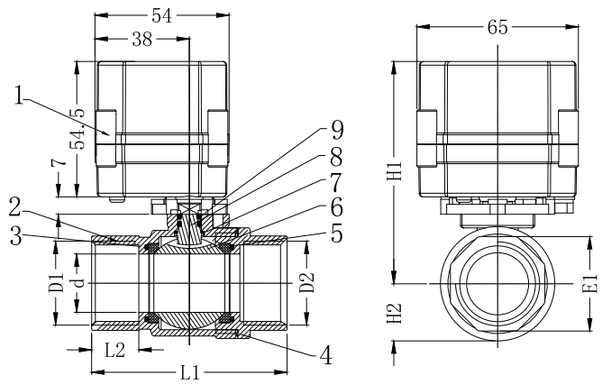

Components 组成

No.	Name	Material	Specification	Quantity
1	Actuator	PPO		1
2	Valve Body	Stainless Steel	304	1
3	O-ring	FKM		2
4	Sealing Gasket	PTFE		1
5	Valve Seat	PTFE		2
6	Ball	Stainless Steel	304	1
7	Gasket	PTFE		1
8	Valve Stem	Stainless Steel	304	1
9	O-ring	FKM		2

DESCRIPTION	D1/D2	d±0.3	L1±1	L2±1	E1±0.5	H1±1	H2
8 -S2-C	1/4"	10	51	12	21	82.5	14
10-S2-C	3/8"	10	51	12	21	82.5	14
15-S2-C	1/2"	15	62	14	25	84.5	17
20-S2-C	3/4"	20	72	17	31	88	20
25-S2-C	1"	25	79	18	38	91	24.5

A20-T Series 2 Way UPVC Electric Ball Valve A20-T系列两通UPVC电动球阀

T25-P2-A

T25-P2-B

T25-P2-C

Technical Parameters 技术参数:

Product size 口径	NPT/BSP/No Thread Glued Type 1/2" 3/4" 1" 11/4" (Optional)
Maximum working pressure 最大工作压力	1.0 MPa
Circulation medium 介质	Fluid, air
Working voltage 额定电压	DC5V DC12V DC24V AC/DC9-24V (Optional)
Wiring diagram 接线图	CR201 CR202 CR301 CR302 CR303 CR304 CR305 CR306 CR501 CR502 CR701 CR702 CR703 CR705 CR706（Optional）
Working current 工作电流	≤500mA
Open/close time 开关时间	≤8S
Life time 寿命	70000 times（testing pressure is 0.4MPa,medium is water)
Valve body material 阀材质	UPVC PPE (Optional)
Actuator material 执行器材质	PPO
Sealing material 密封材料	EPDM & PTFE
Actuator rotation 执行器旋转角度	90°
Torque force 扭力	3 N.m
Cable length 线长	0.5m,1.5m (Optional)
Environment temperature 环境温度	-15℃～50℃
Liquid temperature 液体温度	2℃~55℃
Manual override 手动功能	Yes No (Optional)
Open/close indicator 开关指示	Yes No (Optional)
Protection class 防护等级	IP67

Assemble Diagram 组装图

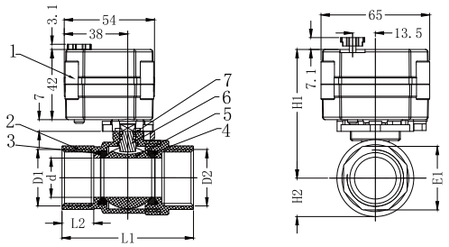

Components 组成

No.	Name	Material	Quantity
1	Actuator	PPO	1
2	Valve Body	UPVC	1
3	O-ring	EPDM	2
4	Valve Seat	PTFE	2
5	Ball	UPVC	1
6	Valve Stem	UPVC+SS304	1
7	O-ring	EPDM	1

DESCRIPTION	D1/D2	d±0.3	L1±1	L2±1	E1±0.5	H1±1	H2
15-P2-B	1/2"	14	60	12	29.5	76.3	19.5
20-P2-B	3/4"	17	73	17	37	78	22
25-P2-B	1"	23	80	18	43.5	83	26.5
32-P2-B	1 1/4"	26	96	23	50	82	28

科威納COVNA®

A20-T Series 2 Way UPVC Electric Ball Valve(AC/DC110-230V)

A20-T系列两通UPVC电动球阀

Technical Parameters 技术参数:

Product size 口径	NPT/BSP/No Thread Glued Type 1/2" 3/4" 1" 11/4" (Optional)
Maximum working pressure 最大工作压力	1.0 MPa
Circulation medium 介质	Fluid, air
Working voltage 额定电压	AC/DC110-230V
Wiring diagram 接线图	CR202 CR301 CR303 CR305 CR306 CR401 CR502 CR702 CR703 CR704 CR705 CR706(Optional)
Working current 工作电流	≤500mA
Open/close time 开关时间	≤8S
Life time 寿命	70000 times（testing pressure is 0.4MPa,medium is water)
Valve body material 阀材质	UPVC PPE (Optional)
Actuator material 执行器材质	PPO
Sealing material 密封材料	EPDM & PTFE
Actuator rotation 执行器旋转角度	90°
Torque force 扭力	3 N.m
Cable length 线长	0.5m,1.5m (Optional)
Environment temperature 环境温度	-15℃～50℃
Liquid temperature 液体温度	2℃~55℃
Manual override 手动功能	Yes No (Optional)
Open/close indicator 开关指示	Yes
Protection class 防护等级	IP67

T25-P2-C

Assemble Diagram 组装图

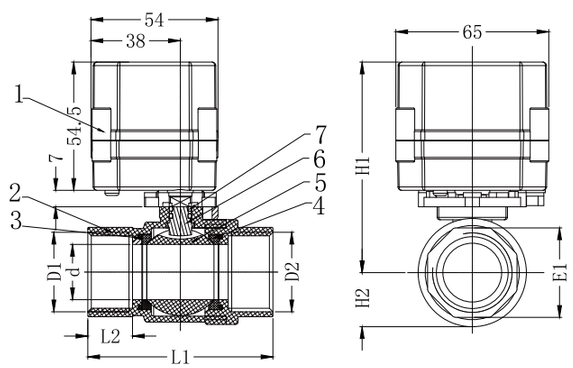

Components 组成

No.	Name	Material	Quantity
1	Actuator	PPO	1
2	Valve Body	UPVC	1
3	O-ring	EPDM	2
4	Valve Seat	PTFE	2
5	Ball	UPVC	1
6	Valve Stem	UPVC+SS304	1
7	O-ring	FKM	1

DESCRIPTION	D1/D2	d±0.3	L1±1	L2±1	E1±0.5	H1±1	H2
15-P2-C	1/2"	14	60	12	29.5	88.8	19.5
20-P2-C	3/4"	17	73	17	37	90.5	22
25-P2-C	1"	23	80	18	43.5	95.5	26.5
32-P2-C	1 1/4"	26	96	23	50	94.5	28

A20-T Series 3 Way SS304 Electric Ball Valve A20-T系列三通不锈钢电动球阀

T20-S3-A

T20-S3-B

T25-S3-C

Technical Parameters 技术参数:

Product size 口径	NPT/BSP 1/4" 3/8" 1/2" 3/4" 1" (Optional)
Maximum working pressure 最大工作压力	1.0 MPa
Circulation medium 介质	Fluid, air
Working voltage 额定电压	DC5V DC12V DC24V AC/DC9-24V (Optional)
Wiring diagram 接线图	CR201 CR202 CR301 CR302 CR303 CR304 CR305 CR306 CR501 CR502 CR701 CR702 CR703 CR705 CR706（Optional）
Working current 工作电流	≤500mA
Open/close time 开关时间	≤8S
Life time 寿命	70000 times（testing pressure is 0.4MPa,medium is water)
Valve body material 阀材质	SS304 SS316（Optional）
Actuator material 执行器材质	PPO
Sealing material 密封材料	FKM&PTFE
Actuator rotation 执行器旋转角度	90°
Torque force 扭力	3 N.m
Cable length 线长	0.5m,1.5m (Optional)
Environment temperature 环境温度	-15℃～50℃
Liquid temperature 液体温度	2℃~90℃
Manual override 手动功能	Yes No (Optional)
Open/close indicator 开关指示	Yes No (Optional)
Protection class 防护等级	IP67

Assemble Diagram 组装图

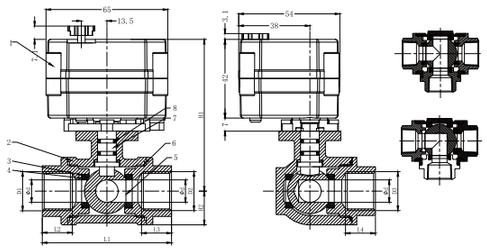

Components 组成

No.	Name	Material	Specification	Quantity
1	Actuator	PPO		1
2	Valve Body	Stainless Steel	304	1
3	O-ring	FKM		4
4	Valve Seat	PTFE		4
5	Ball	Stainless Steel	304	1
6	Sealing Gasket	PTFE		3
7	Valve Stem	Stainless Steel	304	1
8	O-ring	FKM		2

DESCRIPTION	D1/D2/D3	d±0.5	L1±1	L2/L3/L4±0.5	H1±1	H2
8-S3-B	1/4"	6	52	11	71	14
10-S3-B	3/8"	6	52	11	71	14
15-S3-B	1/2"	12	69	17	81	18
20-S3-B	3/4"	15	75	17.5	75.5	20
25-S3-B	1"	18	85	17.5	78.5	23.5

科威納COVNA®

A20-T Series 3 Way SS304 Electric Ball Valve (AC/DC110-230V)

A20-T系列三通不锈钢电动球阀

Technical Parameters 技术参数:

Product size 口径	NPT/BSP 1/4" 3/8" 1/2" 3/4" 1" (Optional)
Maximum working pressure 最大工作压力	1.0 MPa
Circulation medium 介质	Fluid, air
Working voltage 额定电压	AC/DC110-230V
Wiring diagram 接线图	CR202 CR301 CR303 CR305 CR306 CR401 CR502 CR702 CR703 CR704 CR705 CR706(Optional)
Working current 工作电流	≤500mA
Open/close time 开关时间	≤8S
Life time 寿命	70000 times（testing pressure is 0.4MPa,medium is water)
Valve body material 阀材质	SS304 SS316（Optional）
Actuator material 执行器材质	PPO
Sealing material 密封材料	FKM&PTFE
Actuator rotation 执行器旋转角度	90°
Torque force 扭力	3 N.m
Cable length 线长	0.5m,1.5m（Optional）
Environment temperature 环境温度	-15℃～50℃
Liquid temperature 液体温度	2℃~90℃
Manual override 手动功能	Yes No（Optional）
Open/close indicator 开关指示	Yes
Protection class 防护等级	IP67

T25-S3-C

Assemble Diagram 组装图

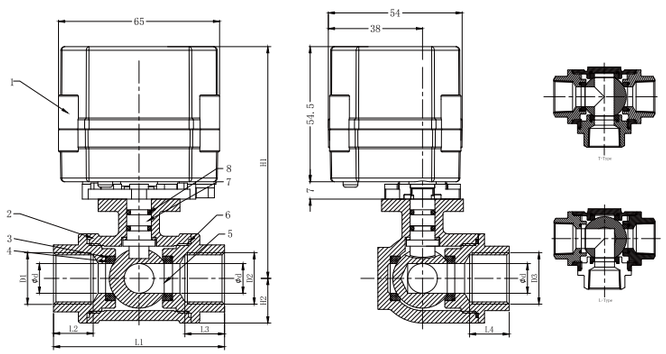

Components 组成

No.	Name	Material	Quantity
1	Actuator	PPO	1
2	Valve Body	SS304	1
3	O-ring	FKM	4
4	Valve Seat	PTFE	4
5	Ball	SS304	1
6	Sealing Gasket	PTFE	3
7	Valve Stem	SS304	1
8	O-ring	FKM	2

L port

T port

DESCRIPTION	D1/D2/D3	d±0.5	L1±1	L2/L3/L4±0.5	H1±0.5	H2
8-S3-C	1/4"	6	52	11	83.5	14
10-S3-C	3/8"	6	52	11	83.5	14
15-S3-C	1/2"	12	69	17	93.5	18
20-S3-C	3/4"	15	75	17.5	88	20
25-S3-C	1"	18	85	17.5	91	23.5

A20-T Series 2 Way SS304 Male Thread Electric Ball Valve（AC/DC110-230V）

A20-T系列两通不锈钢外丝电动球阀

Technical Parameters 技术参数:

Product size 口径	BSP 1/2"
Maximum working pressure 最大工作压力	1.0 MPa
Circulation medium 介质	Fluid, air
Working voltage 额定电压	AC/DC110-230V
Wiring diagram 接线图	CR202 CR301 CR303 CR305 CR306 CR401 CR502 CR702 CR703 CR704 CR705 CR706(Optional)
Working current 工作电流	≤500mA
Open/close time 开关时间	≤5S
Life time 寿命	70000 times（testing pressure is 0.4MPa,medium is water)
Valve body material 阀材质	SS304
Actuator material 执行器材质	PPO
Sealing material 密封材料	FKM & PTFE
Actuator rotation 执行器旋转角度	90°
Torque force 扭力	3 N.m
Cable length 线长	0.5m,1.5m（Optional)
Environment temperature 环境温度	-15℃~50℃
Liquid temperature 液体温度	2℃~90℃
Manual override 手动功能	Yes No（Optional)
Open/close indicator 开关指示	Yes
Protection class 防护等级	IP67

T15-S2-C

Assemble Diagram 组装图

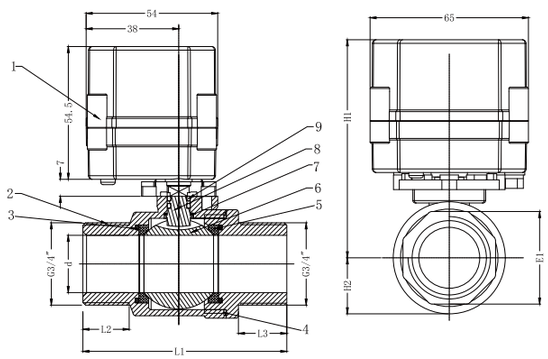

Components 组成

No.	Name	Material	Specification	Quantity
1	Actuator	PPO		1
2	Valve Body	Stainless Steel	304	1
3	O-ring	FKM		2
4	Sealing Gasket	PTFE		1
5	Valve Seat	PTFE		2
6	Ball	Stainless Steel	304	1
7	Gasket	PTFE		1
8	Valve Stem	Stainless Steel	304	1
9	O-ring	FKM		2

DESCRIPTION	D1/D2	d±0.2	L1±1	L2±1	L3±1	E1±0.5	H1±1	H2
15-S2-C	1/2"	15	68	12	12	25	85	17

科威納COVNA®

A20-T Series 3 Way SS304 Male Thread Electric Ball Valve（AC/DC110-230V）

A20-T系列三通不锈钢外丝电动球阀

Technical Parameters 技术参数:

Valve size 口径	NPT/BSP 1/2"(Optional)
Maximum working pressure 最大工作压力	1.0 MPa
Circulation medium 介质	Fluid, air
Working voltage 额定电压	AC/DC110-230V
Wiring diagram 接线图	CR202 CR301 CR303 CR305 CR306 CR401 CR502 CR702 CR703 CR704 CR705 CR706(Optional)
Working current 工作电流	≤500mA
Open/close time 开关时间	≤5S
Life time 寿命	70000 times(testing pressure is 0.4MPa,medium is water)
Valve body material 阀材质	SS304
Actuator material 执行器材质	PPO
Sealing material 密封材料	FKM & PTFE
Actuator rotation 执行器旋转角度	90°
Torque force 扭力	3 N.m
Cable length 线长	0.5m,1.5m（Optional)
Environment temperature 环境温度	-15℃~50℃
Liquid temperature 液体温度	2℃~90℃
Manual override 手动功能	Yes No（Optional)
Open/close indicator 开关指示	Yes
Protection class 防护等级	IP67

T15-S3-C

Assemble Diagram 组装图

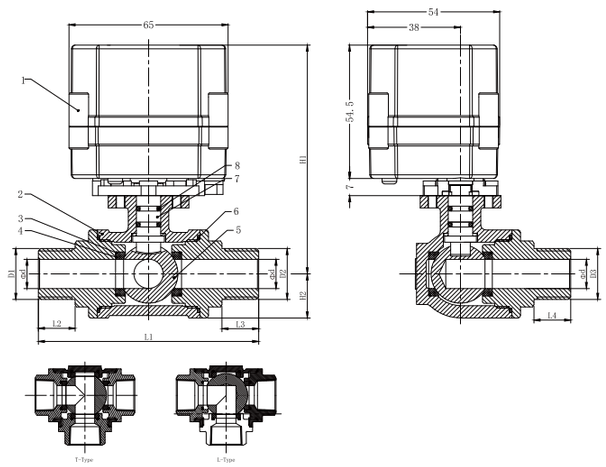

Components 组成

No.	Name	Material	Specification	Quantity
1	Actuator	PPO		1
2	Valve Body	Stainless Steel	304	1
3	O-ring	FKM		4
4	Valve Seat	PTFE		4
5	Ball	Stainless Steel	304	1
6	Sealing Gasket	PTFE		3
7	Valve Stem	Stainless Steel	304	1
8	O-ring	FKM		2

DESCRIPTION	D1/D2/D3	d±0.5	L1±1.5	L2/L3/L4±0.5	H1±1	H2±0.5
15-S3-C	1/2"	12	90	15	93.5	18

A20-T Series 2-Way Brass Electric Ball Valve With Female And Male Thread
A20-T系列两通黄铜一内一外螺纹电动球阀

Technical Parameters 技术参数:

Valve size 口径	NPT/BSP 1/2" 3/4" 1" (Optional)
Maximum working pressure 最大工作压力	1.0MPa
Circulation medium 介质	Fluid, air
Rated voltage 额定电压	DC5V DC12V DC24V AC/DC9-24V AC/DC110-230V (Optional)
Wiring diagram 接线图	CR201 CR202 CR301 CR302 CR303 CR304 CR305 CR306 CR501 CR502 CR701 CR702 CR703 CR705 CR706 (Optional)
Working current 工作电流	≤500mA
Open/close time 开关时间	≤5S
Life time 工作寿命	70000 times (testing pressure is 0.4MPa,medium is water)
Valve body material 阀材质	Brass
Actuator material 执行器材质	PPO
Sealing material 密封材质	FKM & PTFE
Actuator rotation 执行器旋转角度	90°
Torque force 扭力	3N.m
Cable length 线长	0.5m,1.5m (Optional)
Environment temperature 环境温度	-15℃~50℃
Liquid temperature 液体温度	2℃~90℃
Manual override 手动功能	Yes No (Optional)
Open/close indicator 开关指示	Yes No (Optional)
Protection class 防护等级	IP67

T25-B2-B

Assemble Diagram 组装图

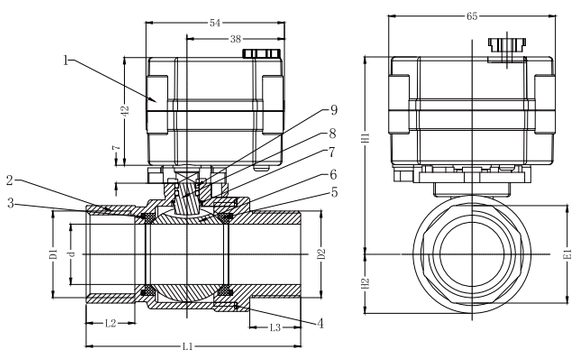

Components 组成

No.	Name	Material	Specification	Quantity
1	Actuator	PPO		1
2	Valve Body	Brass		1
3	O-ring	FKM		2
4	Sealing Gasket	PTFE		1
5	Valve Seat	PTFE		2
6	Ball	Stainless Steel	304	1
7	Gasket	PTFE		1
8	Valve Stem	Brass		1
9	O-ring	FKM		2

DESCRIPTION	D1/D2	d±0.2	L1±1	L2±1	L3±1	E1±0.5	H1±1	H2
15-B2-B	1/2"	15	57	12	12	25	71	16.5
20-B2-B	3/4"	20	72.5	14	14.5	31	74.5	19.5
25-B2-B	1"	23.5	77	16	15	38	76.5	22

科威納COVNA®

A20-T Series 2-Way SS304 Electric Ball Valve With Female And Male Thread (AC/DC110-230V)
A20-T系列两通不锈钢一内一外螺纹电动球阀 (AC/DC110-230V)

Technical Parameters 技术参数:

Valve size 口径	NPT/BSP 1/2" 3/4" 1" (Optional)
Maximum working pressure 最大工作压力	1.0 MPa
Circulation medium 介质	Fluid, air
Working voltage 额定电压	AC/DC110-230V
Wiring diagram 接线图	CR202 CR301 CR303 CR305 CR306 CR401 CR502 CR702 CR703 CR704 CR705 CR706(Optional)
Working current 工作电流	≤500mA
Open/close time 开关时间	≤5S
Life time 寿命	70000 times(testing pressure is 0.4MPa,medium is water)
Valve body material 阀材质	SS304
Actuator material 执行器材质	PPO
Sealing material 密封材料	FKM & PTFE
Actuator rotation 执行器旋转角度	90°
Torque force 扭力	3 N.m
Cable length 线长	0.5m,1.5m (Optional)
Environment temperature 环境温度	-15℃~50℃
Liquid temperature 液体温度	2℃~90℃
Manual override 手动功能	Yes No (Optional)
Open/close indicator 开关指示	Yes
Protection class 防护等级	IP67

T20-S2-C

Assemble Diagram 组装图

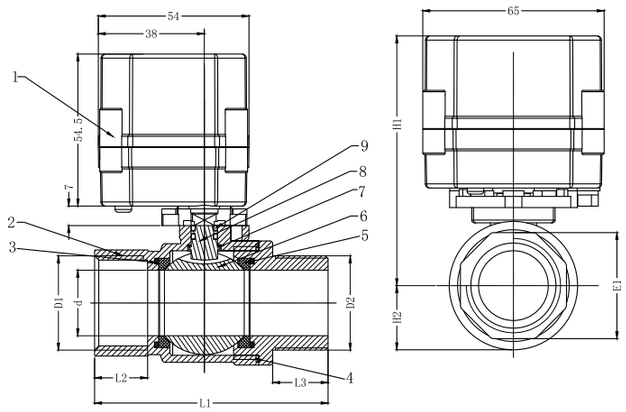

Components 组成

No.	Name	Material	Specification	Quantity
1	Actuator	PPO		1
2	Valve Body	Stainless Steel	304	1
3	O-ring	FKM		2
4	Sealing Gasket	PTFE		1
5	Valve Seat	PTFE		2
6	Ball	Stainless Steel	304	1
7	Gasket	PTFE		1
8	Valve Stem	Stainless Steel	304	1
9	O-ring	FKM		2

DESCRIPTION	D1/D2	d±0.2	L1±1	L2±1	L3±1	E1±0.5	H1±1	H2
15-S2-C	1/2"	15	68	14	12	25	78	17
20-S2-C	3/4"	20	80	17	16	31	88	20
25-S2-C	1"	25	90.5	19	19	38	91.5	24.5

本手册内容仅供参考，不作为使用时的判定依据，详细技术参数及印刷板图请登录我司网站查询：www.covna-valve.com

A20-T Series 2 Way SS304 Tri-clamp Electric Ball Valve
A20-T系列两通不锈钢快装电动球阀

Technical Parameters 技术参数:

Valve size 口径	3/8" 1/2" 3/4" 1" (Optional)
Maximum working pressure 最大工作压力	1.0 MPa
Circulation medium 介质	Fluid, air
Working voltage 额定电压	DC5V DC12V DC24V AC/DC9-24V AC/DC110-230V(Optional)
Wiring diagram 接线图	CR201 CR202 CR301 CR302 CR303 CR304 CR305 CR306 CR401 CR501 CR502 CR701 CR702 CR703 CR704 CR705 CR706 (Optional)
Working current 工作电流	≤500mA
Open/close time 开关时间	≤5S
Life time 寿命	70000 times (testing pressure is 0.4MPa,medium is water)
Valve body material 阀材质	SS304 SS316
Actuator material 执行器材质	PPO
Sealing material 密封材料	FKM & PTFE
Actuator rotation 执行器旋转角度	90°
Torque force 扭力	3 N.m
Cable length 线长	0.5m,1.5m (Optional)
Environment temperature 环境温度	-15℃~50℃
Liquid temperature 液体温度	2℃~90℃
Manual override 手动功能	Yes No (Optional)
Open/close indicator 开关指示	Yes No (Optional)
Protection class 防护等级	IP67

A20-S2-C

Assemble Diagram 组装图

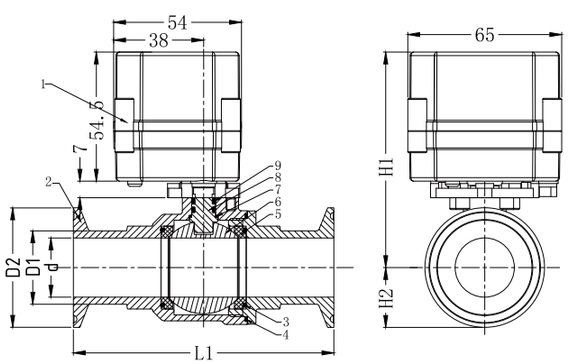

Components 组成

No.	Name	Material	Specification	Quantity
1	Actuator	PPO		1
2	Valve Body	Stainless Steel	304	1
3	O-ring	FKM		2
4	Sealing Gasket	PTFE		1
5	Valve Seat	PTFE		2
6	Ball	Stainless Steel	304	1
7	Gasket	PTFE		1
8	Valve Stem	Stainless Steel	304	1
9	O-ring	FKM		2

DESCRIPTION	d±0.2	D1±0.2	D2±0.2	L±1	H1±1	H2
25-S2-C	25	31	50.5	110	91	25.25
20-S2-C	20	26	50.5	100	88	25.25
15-S2-C	15	21	50.5	100	85	25.25
10-S2-C	9.5	12.7	25.4	75	83	14

科威納COVNA®

A20-T Series 3 Way Vertical Brass Electric Ball Valve A20-T系列立式三通黄铜电动球阀

Technical Parameters 技术参数:

Valve size 口径	NPT/BSP 1/2" 3/4" 1" (Optional)
Maximum working pressure 最大工作压力	1.0 MPa
Circulation medium 介质	Fluid, air
Working voltage 额定电压	DC5V DC12V DC24V AC/DC9-24V AC/DC110-230V(Optional)
Wiring diagram 接线图	CR201 CR202 CR301 CR302 CR303 CR304 CR305 CR306 CR401 CR501 CR502 CR701 CR702 CR703 CR704 CR705 CR706(Optional)
Working current 工作电流	≤500mA
Open/close time 开关时间	≤8S
Life time 寿命	70000 times (testing pressure is 0.4MPa,medium is water)
Valve body material 阀材质	Brass
Actuator material 执行器材质	PPO
Sealing material 密封材料	FKM & PTFE
Actuator rotation 执行器旋转角度	90°
Torque force 扭力	3N.m
Cable length 线长	0.5m,1.5m (Optional)
Environment temperature 环境温度	-15℃~50℃
Liquid temperature 液体温度	2℃~90℃
Manual override 手动功能	Yes No (Optional)
Open/close indicator 开关指示	Yes No (Optional)
Protection class 防护等级	IP67

T25-B3-C

Assemble Diagram 组装图

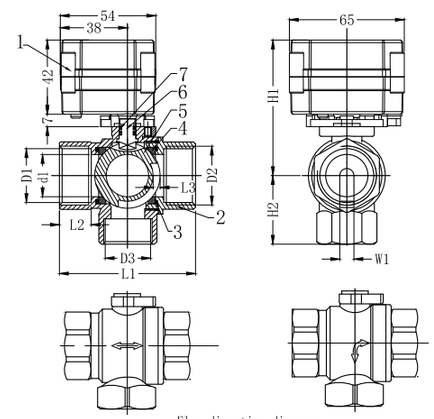

Flow direction diagram

Components 组成

No.	Name	Material	Specification	Quantity
1	Actuator	PPO		1
2	Valve Body	Brass		1
3	O-ring	FKM		2
4	Valve Seat	PTFE		2
5	Ball	Stainless Steel	304	1
6	Valve Stem	Brass		1
7	O-ring	FKM		2

DESCRIPTION	D1/D2/D3	d1±0.3	W1±0.2	L1±1	L2±1	L3±0.2	H1±1	H2
15-B3-C	1/2''	15	8	58	13	3	72	29.5
20-B3-C	3/4''	15	7	66	16	3	70.5	32.5
25-B3-C	1''	24	8	75	17	4	77	40

A20-S Series 2 Way SS304 Timer Drain Valve

A20-S系列两通不锈钢时间控制阀

Technical Parameters 技术参数:

Valve size 口径	NPT/BSP 1/4" 3/8" 1/2" 3/4" 1"(Optional)
Maximum working pressure 最大工作压力	1.0 MPa
Circulation medium 介质	Fluid, air
Valve open /closed time 开关时间	≤ 8S
Working voltage 工作电压	AC/DC9-24V AC/DC110-230V (Optional)
Keeping valve open time 阀开时间范围	00:00:00~99:59:59S
Keeping valve closed time 阀关时间范围	00:00:00~99:59:59S
Working current 工作电流	≤500mA
Life time 寿命	70000 times（testing pressure is 0.4MPa,medium is water)
Valve body material 阀材质	SS304 SS316 Brass Nickel plated brass（Optional）
Actuator material 执行器材质	PPO
Sealing material 密封材质	FKM & PTFE
Actuator rotation 执行器旋转角度	90°
Torque force 扭力	3N.m
Cable length 线长	0.5m,1.5m（Optional）
Environment temperature 环境温度	-15℃~50℃
Liquid temperature 液体温度	2℃~90℃
Manual override 手动功能	No
Open/close indicator 开关指示	Yes
Protection class 防护等级	IP67

S20-S2-C

Patent Certificate No:

专利号：ZL 2012 2 0538591.4

"Spring return" in case of power is failure

(which is optional according to requirements)

可选功能-断电关阀

Assemble Diagram 组装图

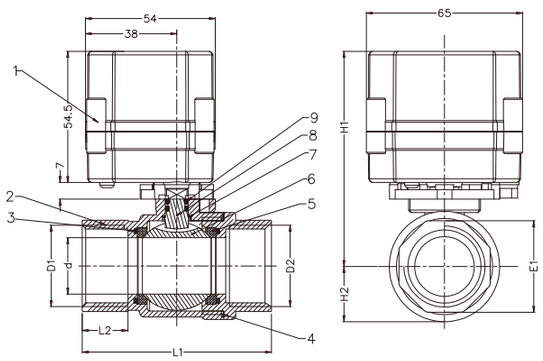

Components 组成

No.	Name	Material	Specification	Quantity
1	Actuator	PPO		1
2	Valve Body	Stainless Steel	304	1
3	O-ring	FKM		2
4	Sealing Gasket	PTFE		1
5	Valve Seat	PTFE		2
6	Ball	Stainless Steel	304	1
7	Gasket	PTFE		1
8	Valve Stem	Stainless Steel	304	1
9	O-ring	FKM		2

DESCRIPTION	D1/D2	d±0.3	L1±1	L2±1	E1±0.5	H1±1	H2
8-S2-C	1/4"	10	51	12	21	82.5	14
10-S2-C	3/8"	10	51	12	21	82.5	14
15-S2-C	1/2"	15	62	14	25	84.5	17
20-S2-C	3/4"	20	72	17	31	88	20
25-S2-C	1"	25	79	18	38	91	24.5

科威納COVNA®

Operation instruction of A20-S series timer drain valve

Description operator panel：

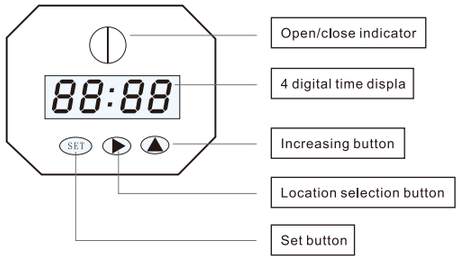

Operating manual：

Actuator parameter setting have two menu structures on below:
Function code (fist menu),
The setting parameters of function code (secondary menu)

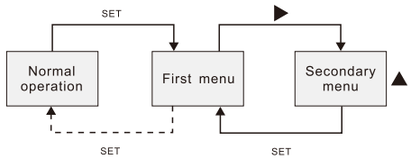

Picture 0

Secondary menu operation flowchart：

Function code	Content	Value	Unit	Remarks
ton	valve keeping open time	00:00:00-99:59:59	H:M:S	
toFF	valve keeping closed time	00:00:00-99:59:59	H:M:S	
PonS	Power -on Action	On/oFF		
Cnt	The open & close times	0-9999	times	The total number of open & close times from use to view the menu

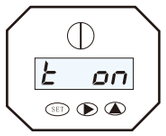

Picture1

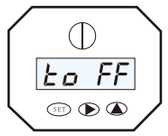

Picture2

1、Press SET 4 seconds and enter to first menu, the screen display picture 1 text (ton) , indicating enter to set the valve keeping open state .

Press SET again, the screen display picture 2 text (to FF) ,indicating enter to set the valve keeping closed state .

Picture3

Picture4

2、Press then the ▶ after entering the stetting state , showing the valve keeping time for setting (Set the valve keeping open time in ton state. Set the valve keeping closed time in toFF state) . Select flashing bit by pressing ▶ , and change the numerical by pressing ▲ .When " : " is flashing , indicate setting "HS (hours) :MS(minutes)", and change the flashing fit by pressing ▶ .When the " : " is bright , indicate setting " MS(minutes) :SS(seconds) " . The data will be deposited in the valve controller after completing the setting .Press SET when finish setting , will return fist menu , press SET again , enter to next fist menu to set parameters .

Picture5

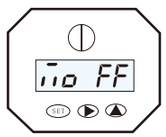

Picture6

3、Press the SET & ▶ , the screen display picture 5 , indicating open the valve manually.
Press the SET & ▲ , the screen display picture 6, indicating closed the valve manually .
Exit manual mode to press the SET & ▶ or SET & ▲ . And go the power -on action .

4、Press SET to enter the setting menu, the interface shows Cnt, Press ▶ to enter, at this time the screen shows the on-off valve,The number of times, one open and one close count,close and open valve by manually does not count, up to 9999 times. Press ▶ on the counting screen, and the number flashes. Thenpress ▲ to clear the counting.

5、After three times, the screen displays ERR1 and the buzzer alarms. Press any key to manually disactivate the alarm and press ▶ to exit the alarm mode.

本手册内容仅供参考，不作为使用时的判定依据，详细技术参数及印刷板图请登录我司网站查询: www.covna-valve.com

A20-T Series 3 Way Horizontal Brass Electric Ball Valve
A20-T系列卧式三通黄铜电动球阀

Technical Parameters 技术参数:

Valve size 口径	NPT/BSP 1/4" 3/8" 1/2" 3/4" 1" (Optional)
Maximum working pressure 最大工作压力	1.0MPa
Circulation medium 介质	Fluid, air
Rated voltage 额定电压	DC5V DC12V DC24V AC/DC9-24V AC/DC110-230V (Optional)
Wiring diagram 接线图	CR201 CR202 CR301 CR302 CR303 CR304 CR305 CR306 CR401 CR501 CR502 CR701 CR702 CR703 CR704 CR705 CR706 (Optional)
Working current 工作电流	≤500mA
Open/close time 开关时间	≤8S
Life time 工作寿命	70000 times (testing pressure is 0.4MPa,medium is water)
Valve body material 阀材质	Brass
Actuator material 执行器材质	PPO
Sealing material 密封材质	FKM & PTFE
Actuator rotation 执行器旋转角度	90°
Torque force 扭力	3N.m
Cable length 线长	0.5m,1.5m (Optional)
Environment temperature 环境温度	-15℃~50℃
Liquid temperature 液体温度	2℃~90℃
Manual override 手动功能	Yes No (Optional)
Open/close indicator 开关指示	Yes No (Optional)
Protection class 防护等级	IP67

T20-B3-B

Assemble Diagram 组装图

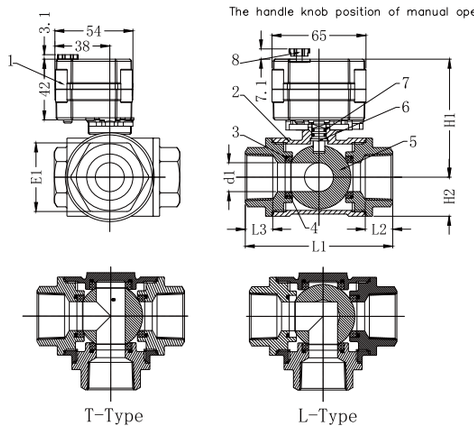

No.	Name	Material	Specification	Quantity
1	Actuator	PPO		1
2	Valve Body	Brass		1
3	O-ring	FKM		4
4	Valve Seat	PTFE		4
5	Ball	Stainless Steel	304	1
6	Valve Stem	Brass		1
7	O-ring	FKM		2
8	ManualOperation	POM		1

DESCRIPTION	D1/D2	d1±0.3	L1±1	L2/L3±1	E1±0.5	H1±1	H2
8-B3-B	1/4"	6	51	11	20	65.5	11
10-B3-B	3/8"	6	51	11	20	65.5	11
15-B3-B	1/2"	12	70	17.5	27	72.5	17
20-B3-B	3/4"	15	75	17	31	76	20.5
25-B3-B	1"	18	85	17.8	38	78	22.5

科威納COVNA®

A20-M Series 2 Way SS304 Modulating Ball Valve
A20-M系列两通不锈钢比例调节阀

Technical Parameters 技术参数:

Valve size 口径	NPT/BSP 1/4" 3/8" 1/2" 3/4" 1" (Optional)
Maximum working pressure 最大工作压力	1.0MPa
Circulation medium 介质	Fluid, air
Rated voltage 额定电压	DC9-24V DC9-45V
Input signal 输入信号	4-20mA 1-5V 2-10V 0-5V 0-10V RS485(Optional)
Out put signal 输出信号	PWM 4-20mA 1-5V 2-10V 0-5V 0-10V(Optional)
Working current 工作电流	≤500mA
Open/close time 开关时间	≤8S
Life time 工作寿命	70000 times (testing pressure is 0.4MPa,medium is water)
Valve body material 阀材质	SS304 SS316
Actuator material 执行器材质	PPO
Sealing material 密封材质	FKM & PTFE
Ball type 阀球类型	Full port or V 型(Optional)
Torque force 扭力	3 N.m
Cable Length 线长	0.5m 1.5m (Optional)
Environment temperature 环境温度	-15°C~50°C
Liquid temperature 液体温度	2°C ~ 90°C
Manual override 手动功能	No
Open/close indicator 开关指示	Yes No (Optional)
Protection class 防护等级	IP67

M15-S2-C

Wiring Diagram接线图

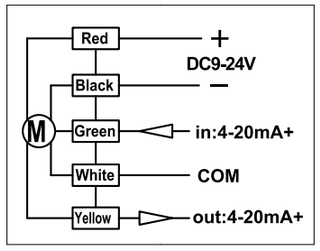

1、RD（红线） 电源+，接DC9~24V正极
2、BK（黑线） 电源-，接DC9~24V负极
3、GR（绿线） 位置输入+，控制电流（4-20mA）正极
4、WT（白线）位置输入-，位置反馈负极
5、YW（黄线）位置反馈+，反馈信号为输出电流4-20mA

1. RD(red cable) connects DC9-24V positive pole
2. BK(black cable) connects DC9 ~ 24V-negative pole
3. GR(green cable) connects position input /control current +/ control voltage +4-20mA
4. WT(white cable) connects common signal input and output signal' s negative
5. YW(yellow cable) connects position feedback positive, output 4-20mA as feedback signal

Assemble Diagram 组装图

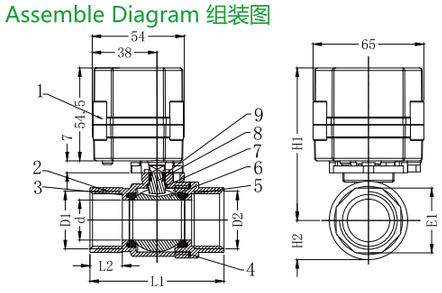

Components 组成

No.	Name	Material	Specification	Quantity
1	Actuator	PPO		1
2	Valve Body	Stainless Steel	304	1
3	O-ring	FKM		2
4	Sealing Gasket	PTFE		1
5	Valve Seat	PTFE		2
6	Ball	Stainless Steel	304	1
7	Gasket	PTFE		1
8	Valve Stem	Stainless Steel	304	1
9	O-ring	FKM		2

DESCRIPTION	D1/D2	d±0.5	L1±1	L2±1	E1±0.5	H1±1	H2
8-S2-C	1/4"	10	51	12	21	82.5	14
10-S2-C	3/8"	10	51	12	21	82.5	14
15-S2-C	1/2"	15	62	14	25	84.5	17
20-S2-C	3/4"	20	72	17	31	88	20
25-S2-C	1"	25	79	18	38	91	24.5

A20-T Series 2-way Brass Electric Ball Valve With Heightening Bracket
A20-T系列两通黄铜电动球阀配加高支架

Technical Parameters 技术参数:

Valve size 口径	NPT/BSP 1/4" 3/8" 1/2" 3/4" 1" 1 1 /4" （Optional）
Maximum working pressure 最大工作压力	1.0MPa
Circulation medium 介质	Fluid, air
Rated voltage 额定电压	DC5V DC12V DC24V AC/DC9-24V AC/DC110-230V（Optional）
Wiring diagram 接线图	CR201 CR202 CR301 CR302 CR303 CR304 CR305 CR306 CR501 CR502 CR701 CR702 CR703 CR705 CR706（Optional）
Working current 工作电流	≤500mA
Open/close time 开关时间	≤5S
Life time 工作寿命	70000 times（testing pressure is 0.4MPa,medium is water）
Valve body material 阀材质	Brass Nickel plated brass （Optional）
Actuator material 执行器材质	PPO
Sealing material 密封材质	FKM & PTFE
Actuator rotation 执行器旋转角度	90°
Torque force 扭力	3 N.m
Cable length 线长	0.5m,1.5m（Optional）
Environment temperature 环境温度	-15℃～50℃
Liquid temperature 液体温度	2℃～90℃
Manual override 手动功能	Yes No (Optional)
Open/close indicator 开关指示	Yes No (Optional)
Protection class 防护等级	IP67

T25-B2-B

Assemble Diagram 组装图

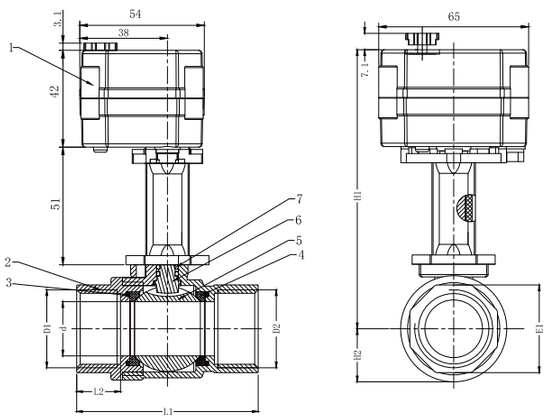

Components 组成

No.	Name	Material	Specification	Quantity
1	Actuator	PPO		1
2	Valve Body	Brass		1
3	O-ring	FKM		2
4	Valve Seat	PTEE		2
5	Ball	Stainless Steel	304	1
6	Valve Stem	Brass		1
7	O-ring	FKM		2
8	Holder	PPO		1
9	Coupling	Stainless Steel	304	1

DESCRIPTION	D1/D2	d1±0.3	L1±1	L2±1	E1±0.5	H1±1.5	H2
8-B2-B	1/4"	8	50	12	20.5	111.5	12
10-B2-B	3/8"	10	50	12	20.5	111.5	12
15-B2-B	1/2"	15	57	12	25	115	16
20-B2-B	3/4"	20	65.5	15	31	118.5/120	19
25-B2-B	1"	23.5	71.5	16	38	120.5	22
32-B2-B	1 1 /4"	25	80	18	46	122	25
32 B2 B	1 1/4"	29	80	15	46	137	27

科威納COVNA®

A20-T Series 2 Way UPVC Double Union Electric Ball Valve
A20-T 系列两通UPVC双由令电动球阀

Technical Parameters 技术参数:

Valve size 口径	NPT/BSP/No Thread Glued Type 1/2"（Optional）
Maximum working pressure 最大工作压力	1.0 MPa
Circulation medium 介质	Fluid, air
Working voltage 额定电压	DC5V DC12V DC24V AC/DC9-24V（Optional）
Wiring diagram 接线图	CR201 CR202 CR301 CR302 CR303 CR304 CR305 CR306 CR501 CR502 CR701 CR702 CR703 CR705 CR706（Optional）
Working current 工作电流	≤500mA
Open/close time 开关时间	≤8S
Life time 寿命	70000 times(testing pressure is 0.4MPa,medium is water)
Valve body material 阀材质	UPVC
Actuator material 执行器材质	PPO
Sealing material 密封材料	EPDM/FKM&PTFE（Optional）
Actuator rotation 执行器旋转角度	90°
Torque force 扭力	3 N.m
Cable length 线长	0.5m,1.5m（Optional）
Environment temperature 环境温度	-15℃～50℃
Liquid temperature 液体温度	2~55℃
Manual override 手动功能	Yes No（Optional）
Open/close indicator 开关指示	Yes No（Optional）
Protection class 防护等级	IP67

T15-P2-C

Assemble Diagram 组装图

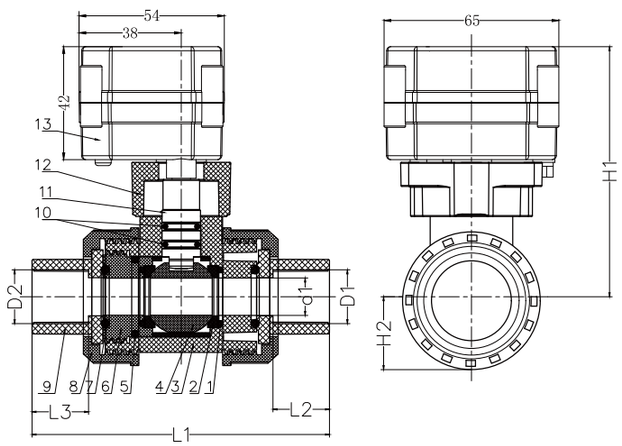

Components 组成

No.	Name	Material	Quantity
1	O-ring	EPDM/VITON	2
2	Valve Seat	PTFE	2
3	Valve Body	UPVC	1
4	Ball	UPVC	1
5	O-ring	EPDM/VITON	2
6	Bonnet	UPVC	2
7	O-ring	EPDM/VITON	2
8	Gland	UPVC	2
9	Socket	UPVC	2
10	O-ring	EPDM/VITON	2
11	Valve Stem	PPO	1
12	Holder	PPO	1
13	Acatuator	PPO	1

DESCRIPTION	D1/D2	d±0.5	L1±1.5	L2/L3±0.5	H1±1.5	H2
15-P2-A/C	1/2"	15	107	22.3	88	27.5

A20-T Series Reduced-port 2-Way SS304 Electric Ball Valve
A20-T系列两通不锈钢缩通径电动球阀

Technical Parameters 技术参数:

Valve size 口径	NPT/BSP 1/2" 3/4" 1"（Optional）
Maximum working pressure 最大工作压力	1.0MPa
Circulation medium 介质	Fluid, air
Rated voltage 额定电压	DC5V DC12V DC24V AC/DC9-24V（Optional）
Wiring diagram 接线图	CR201 CR202 CR301 CR302 CR303 CR304 CR305 CR306 CR501 CR502 CR701 CR702 CR703 CR705 CR706（Optional）
Working current 工作电流	≤500mA
Open/close time 开关时间	≤5S
Life time 工作寿命	70000 times（testing pressure is 0.4MPa,medium is water）
Valve body material 阀材质	SS304 SS316（Optional）
Actuator material 执行器材质	PPO
Sealing material 密封材质	FKM & PTFE
Actuator rotation 执行器旋转角度	90°
Torque force 扭力	3N.m
Cable length 线长	0.5m,1.5m（Optional）
Environment temperature 环境温度	-15℃～50℃
Liquid temperature 液体温度	2℃～90℃
Manual override 手动功能	Yes No (Optional)
Open/close indicator 开关指示	Yes No (Optional)
Protection class 防护等级	IP67

T20-S2-B

Assemble Diagram 组装图

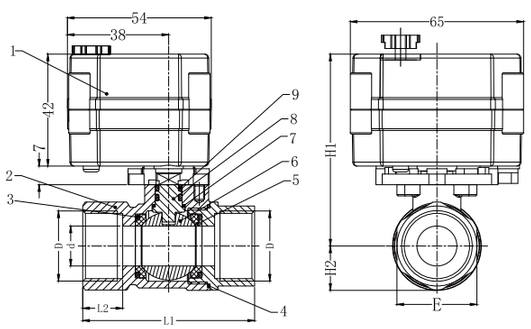

Components 组成

No.	Name	Material	Specification	Quantity
1	Actuator	PPO		1
2	Valve Body	Stainless Steel	304	1
3	O-ring	FKM/EPDM		2
4	Sealing Gasket	PTFE		1
5	Valve Seat	PTFE		2
6	Ball	Stainless Steel	304	1
7	Gasket	PTFE		1
8	Valve Stem	Stainless Steel	304	1
9	O-ring	FKM/EPDM		2

DESCRIPTION	D	d±0.3	L1±1	L2±0.5	E	H1±1	H2
S2-DN15-Ø14-B	1/2"	14	62	14	25	72.5	17
S2-DN20-Ø15-B	3/4"	15	64.5	15	30	72	16.65
S2-DN32-Ø25-B	1-1/4"	25	80	19.5	46	79	24.5

科威納COVNA®

A100 Series 2 Way UPVC Electric Ball Valve
A100系列两通UPVC电动球阀

Technical Parameters 技术参数:

Valve size 口径	NPT/BSP/No Thread Glued Type 1/2" 3/4" 1" 1 1/4" 1 1/2" 2"（Optional）
Maximum working pressure 最大工作压力	1.0MPa
Circulation medium 介质	Fluid, air
Rated voltage 额定电压	DC12V DC24V AC/DC12-24V AC/DC110-230V(Optional)
Wiring diagram 接线图	CR201 CR202 CR301 CR303 CR305 CR306 CR401 CR501 CR502 CR703 CR704 CR705 CR706(Optional)
Working current 工作电流	≤1A
Open/close time 开关时间	≤15S
Life time 工作寿命	70000 times（testing pressure is 0.4MPa,medium is water）
Valve Body material 阀材质	UPVC
Actuator material 执行器材质	PPO
Sealing material 密封材质	EPDM / FKM & PTFE（Optional）
Actuator rotation 执行器旋转角度	90°
Torque force 扭力	10N.m
Cable length 线长	0.5m,1.5m（Optional）
Environment temperature 环境温度	-15℃～50℃
Liquid temperature 液体温度	2℃～55℃
Manual override 手动功能	No
Open/close indicator 开关指示	Yes
Protection class 防护等级	IP67

T40-P2-C

Assemble Diagram 组装图

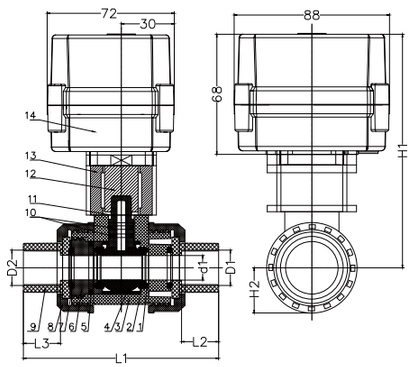

Components 组成

No.	Name	Material	specification	Quantity
1	O-ring	EPDM/VITON		2
2	Valve Seat	PTFE		2
3	Valve Body	UPVC		1
4	Ball	UPVC		1
5	O-ring	EPDM/VITON		2
6	Bonnet	UPVC		2
7	O-ring	EPDM/VITON		2
8	Gland	UPVC		2
9	Socket	UPVC		2
10	O-ring	EPDM/VITON		2
11	Valve Stem	UPVC		1
12	Coupling	Stainless steel	304	1
13	Holder	Stainless steel	304	1
14	Acatuator	PPO		1

DESCRIPTION	D1/D2	d1±0.3	L1±1	L2/L3±1	H1±1	H2	D1/D2			
15-P2-C	1/2''	15	107	22.3	130	27	21.54	20.30	22.4	22.40
20-P2-C	3/4''	20	115	25.5	134.5	32	26.87	25.30	26.45	26.40
25-P2-C	1''	25	129	28.6	146.3	37	33.65	32.30	32.55	34.50
32-P2-C	1 1/4''	32	144	32	156.8	42	42.42	40.30	38.60	42.50
40-P2-C	1 1/2''	40	161	35	163.6	49	48.56	50.30	48.70	48.60
50-P2-C	2"	50	173	38	179.6	59	60.63	63.30	60.80	60.60
							ANSI	DIN	JIS	CNS

A100-T Series 2 Way SS304 Electric Ball Valve
A100-T 系列两通不锈钢电动球阀

Technical Parameters 技术参数:

Valve size 口径	NPT/BSP 1/2" 3/4" 1" 1-1/4" 1-1/2" 2" (Optional)
Maximum working pressure 最大工作压力	1.0MPa
Circulation medium 介质	Fluid, air
Rated voltage 额定电压	DC12V DC24V AC/DC12-24V AC/DC110-230V(Optional)
Wiring diagram 接线图	CR201 CR202 CR301 CR303 CR305 CR306 CR401 CR501 CR502 CR703 CR704 CR705 CR706 (Optional)
Working current 工作电流	≤1A
Open/close time 开关时间	≤15S
Life time 工作寿命	70000 times（testing pressure is 0.4MPa,medium is water)
Valve body material 阀材质	SS304 SS316(Optional)
Actuator material 执行器材质	PPO
Sealing material 密封材质	FKM & PTFE
Actuator rotation 执行器旋转角度	90°
Torque force 扭力	10N.m
Cable length 线长	0.5m 1.5m （Optional)
Environment temperature 环境温度	-15℃~50℃
Liquid temperature 液体温度	2℃~90℃
Manual override 手动功能	No
Open/close indicator 开关指示	Yes
Protection class 防护等级	IP67

T32-S2-C

Assemble Diagram 组装图

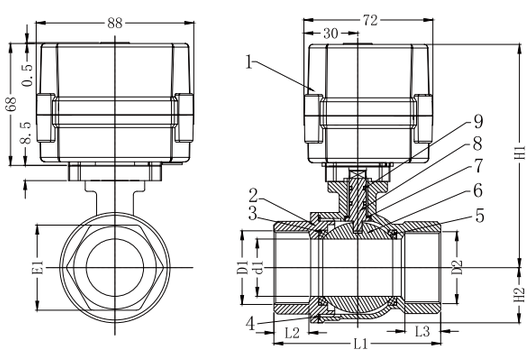

Components 组成

No.	Name	Material	specification	Quantity
1	Actuator	PPO		1
2	Valve Body	stainless steel	304	1
3	O-ring	FKM		2
4	Sealing Gasket	PTFE		1
5	Valve Seat	PTFE		2
6	Ball	stainless steel	304	1
7	Gasket	PTFE		1
8	Valve Stem	stainless steel	304	1
9	O-ring	FKM		2

DESCRIPTION	D1/D2	d1±0.3	L1±1	L2/L3±1	E1±0.5	H1±1	H2
50-S2-C	2"	49	130	27	66	136.5	45
40-S2-C	1-1/2"	38	114	26	54	128.5	36
32-S2-C	1-1/4"	32	102	25	47	121.5	31
25-S2-C	1"	25	80	18	38	106	24.5
20-S2-C	3/4"	20	72	17	31	103	20
15-S2-C	1/2"	15	63	14	25	99	17

科威納COVNA®

A100-T Series Electric 3 Way Electric SS304 Ball Valve
A100-T 系列三通不锈钢电动球阀

Technical Parameters 技术参数:

Product size 口径	NPT/BSP 1/2" 3/4" 1" (Optional)
Maximum working pressure 最大工作压力	1.0MPa
Circulation medium 介质	Fluid, air
Rated voltage 额定电压	DC12V DC24V AC/DC12-24V AC/DC110-230V(Optional)
Wiring diagram 接线图	CR201 CR202 CR301 CR303 CR305 CR306 CR401 CR501 CR502 CR703 CR704 CR705 CR706 (Optional)
Working current 工作电流	≤1A
Open/close time开关时间	≤15S
Life time 工作寿命	70000 times（testing pressure is 0.4MPa,medium is water)
Valve body material 阀体材质	SS304 SS316 (Optional)
Actuator material 执行器材质	PPO
Sealing material 密封材质	FKM & PTFE
Actuator rotation 执行器旋转角度	90°
Toque force 扭力	10N.m
Cable length 线长	0.5m,1.5m（Optional)
Environment temperature 环境温度	-15℃~50℃
Liquid temperature 液态温度	2℃~90℃
Manual override 手动功能	No
Open/close indicator 开关指示	Yes
Protection class 防护等级	IP67

T25-S3-C

Assemble Diagram 组装图

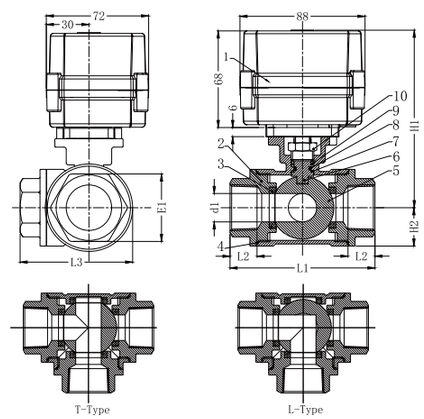

Components 组成

No.	Name	Material	specification	Quantity
1	Actuator	PPO		1
2	Valve Body	Stainless Steel	304	1
3	Valve Seat	PTFE		4
4	Sealing Gasket	PTFE		3
5	Ball	Stainless Steel	304	1
6	Valve Stem	Stainless Steel	304	1
7	Stem Gasket	PTFE		1
8	Oil-seal	FKM		1
9	Packing	PTFE		2
10	Packing Gland	Stainless Steel	304	1

L port

T port

DESCRIPTION	D1/D2	d1±0.3	L1±1	L2±1	E1±0.5	H1±1	H2	L3
15-S3-C	1/2"	12	69	18	25	111.5	18	53
20-S3-C	3/4''	15	79	20	31	116	21	60
25-S3-C	1''	18	86	20	38	124.5	23.5	68

本手册内容仅供参考，不作为使用时的判定依据，详细技术参数及印刷板图请登录我司网站查询：www.covna-valve.com

A100-T Series 2 Way Brass Electric Ball Valve
A100-T系列两通黄铜电动球阀

Technical Parameters 技术参数:

Valve size 口径	NPT/BSP 1/2" 3/4" 1" 1-1/4" 1-1/2" 2" (Optional)
Maximum working pressure 最大工作压力	1.0MPa
Circulation medium 介质	Fluid, air
Rated voltage 额定电压	DC12V DC24V AC/DC12-24V AC/DC110-230V((Optional)
Wiring diagram 接线图	CR201 CR202 CR301 CR303 CR305 CR306 CR401 CR501 CR502 CR703 CR704 CR705 CR706 (Optional)
Working current 工作电流	≤1A
Open/close time 开关时间	≤15S
Life time 工作寿命	70000 times（testing pressure is 0.4MPa,medium is water)
Valve body material 阀材质	Brass
Actuator material 执行器材质	PPO
Sealing material 密封材质	FKM & PTFE
Actuator rotation 执行器旋转角度	90°
Torque force 扭力	10N.m
Cable length 线长	0.5m 1.5m （Optional)
Environment temperature 环境温度	-15℃~50℃
Liquid temperature 液体温度	2℃~90℃
Manual override 手动	No
Open/close indicator 开关指示	Yes
Protection class 防护等级	IP67

T50-B2-C

Assemble Diagram 组装图

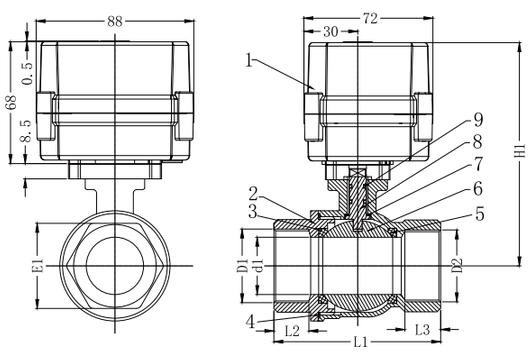

Components 组成

No.	Name	Material	specification	Quantity
1	Actuator	PPO		1
2	Valve Body	stainless steel	Brass	1
3	O-ring	FKM		2
4	Sealing Gasket	PTFE		1
5	Valve Seat	PTFE		2
6	Ball	stainless steel	304	1
7	Gasket	PTFE		1
8	Valve Stem	stainless steel	Brass	1
9	O-ring	FKM		2

DESCRIPTION	D1/D2	d1±0.3	L1±1	L2/L3±1	E1±0.5	H1±1
50-B2-C	2"	49	130	27	66	136.5
40-B2-C	1-1/2"	38	114	25	54	127.5
32-B2-C	1-1/4"	32	102	24.5	47	121.5
25-B2-C	1"	23.5	71.5	16	38	104
20-B2-C	3/4"	20	65.5	15	31	102/103.5
15-B2-C	1/2"	15	57	12	25	98.5

科威納COVNA®

A150-T Series 2 Way SS304 Tri-clamp Electric Ball Valve
A150-T系列两通不锈钢三片式快装电动球阀

Technical Parameters 技术参数:

Valve size 口径	3/8" 1/2" 3/4" 1" 1 1/4" (Optional)
Connection standard 连接标准	ISO5211 F03、F05
Output axis specification 输出轴规格	11*11 9*9
Maximum working pressure 最大工作压力	1.6MPa
Circulation medium 介质	Fluid, air
Rated voltage 额定电压	DC12V DC24V AC24V DC12-24V AC110-230V (Optional)
Wiring diagram 接线图	CR201 CR202 CR301 CR303 CR305 CR306 CR501 CR502 CR702 CR703 CR705 CR706（Optional)
Working current 工作电流	≤1.5A
Open/close time 开关时间	≤12S
Life time 寿命	70000 times（testing pressure is 0.4MPa, medium is water)
Valve body material 阀材质	SS304 SS316（Optional)
Actuator material 执行器材质	PPO
Sealing material 密封材料	FKM & PTFE
Actuator rotation 执行器旋转角度	90°
Torque force 扭力	15 N.m
Cable Length 线长	0.5m ,1.5m（Optional)
Environment temperature 环境温度	-15℃ ~ 50℃
Liquid temperature 液体温度	2℃ ~ 90℃
Manual operation 手动操作	Yes
Open/close indicator 开关指示	Yes
Protection class 防护等级	IP67

T32-S23-B

Assemble Diagram 组装图

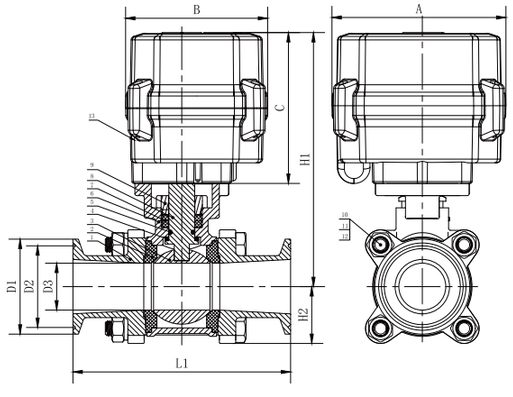

Components 组成

No.	Name	Material	Specification	Quantity
1	Bonnet	Stainless Steel	304	2
2	Sealing	PTFE		2
3	Ball	Stainless Steel	304	1
4	Gasket	PTFE		1
5	O-Ring	FKM		1
6	Valve Body	Stainless Steel	304	1
7	Packing	PTFE		2
8	Valve Stem	Stainless Steel	304	1
9	Packing Gland	Stainless Steel	304	1
10	Bolt	Stainless Steel	304	4
11	Spring Washer	Stainless Steel	304	4
12	Nut	Stainless Steel	304	4
13	Actuator	PPO		1

DESCRIPTION	A	B	C	D1±0.3	D2±0.3	D3±0.5	L1±2	H1±2	H2
15-S23-B	92.6	75.7	80.4	50.5	43.5	15	97.5	123.4	25.25
20-S23-B	92.6	75.7	80.4	50.5	43.5	20	105.5	127.4	28
25-S23-B	92.6	75.7	80.4	50.5	43.5	25	116	135.4	30
32-S23-B	92.6	75.7	80.4	50.5	43.5	32	133.5	140.4	37

A150-T Series 2 Way SS304 Electric Ball Valve
A150-T系列两通不锈钢电动球阀

Technical Parameters 技术参数:

Valve size 口径	NPT/BSP 1 1/4" 1 1/2" 2" (Optional)
Connection standard 连接标准	ISO5211 F03、F05
Output axis specification 输出轴规格	11*11 9*9
Maximum working pressure 最大工作压力	1.0MPa
Circulation medium 介质	Fluid, air
Rated voltage 额定电压	DC12V DC24V AC24V DC12-24V AC110-230V (Optional)
Wiring diagram 接线图	CR201 CR202 CR301 CR303 CR305 CR306 CR501 CR502 CR702 CR703 CR705 CR706 (Optional)
Working current 工作电流	≤1.5A
Open/close time 开关时间	≤12S
Life time 寿命	70000 times (testing pressure is 0.4MPa, medium is water)
Valve body material 阀材质	SS304 SS316 (Optional)
Actuator material 执行器材质	PPO
Sealing material 密封材料	FKM & PTFE
Actuator rotation 执行器旋转角度	90°
Torque force 扭力	15 N.m
Cable Length 线长	0.5m ,1.5m (Optional)
Environment temperature 环境温度	-15℃~50℃
Liquid temperature 液体温度	2℃~90℃
Manual operation 手动操作	Yes
Open/close indicator 开关指示	Yes
Protection class 防护等级	IP67

T50-S2-B

Assemble Diagram 组装图

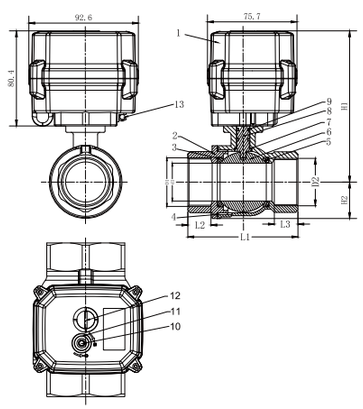

Components 组成

No.	Name	Material	Specification	Quantity
1	Actuator	PPO		1
2	Valve Body	Stainless Steel	304	1
3	O-ring	FKM		2
4	Sealing Gasket	PTFE		1
5	Valve Seat	PTFE		2
6	Ball	Stainless Steel	304	1
7	Gasket	PTFE		1
8	Valve Stem	Stainless Steel	304	1
9	O-ring	FKM		2
10	Manual Shaft	Stainless Steel	303	1
11	Oil-seal	NBR		1
12	Indicator	PC		1
13	Hexagon Wrench	Stainless Steel	303	1

DESCRIPTION	D1/D2	d1±0.3	L1±1	L2/L3±1	E1±0.5	H1±1	H2
32-S2-B	1 1/4"	32	102	25	47	125.4	31
40-S2-B	1 1/2"	38	114	26	54	132.4	36
50-S2-B	2"	49	130	27	66	140.4	44.5

科威納COVNA®

A150-T Series 3 Way SS304 Electric Ball Valve
A150-T系列三通不锈钢电动球阀

Technical Parameters 技术参数:

Valve size 口径	NPT/BSP 1/2" 3/4" 1" (Optional)
Connection standard 连接标准	ISO5211 F03、F05
Output axis specification 输出轴规格	11*11 9*9
Maximum working pressure 最大工作压力	1.0Mpa
Circulation medium 介质	Fluid, air
Rated voltage 额定电压	DC12V DC24V AC24V DC12-24V AC110-230V (Optional)
Wiring diagram 接线图	CR201 CR202 CR301 CR303 CR305 CR306 CR501 CR502 CR702 CR703 CR705 CR706 (Optional)
Working current 工作电流	≤1.5A
Open/close time 开关时间	≤12S
Life time 寿命	70000 times (testing pressure is 0.4MPa, medium is water)
Valve body material 阀材质	SS304 SS316 (Optional)
Actuator material 执行器材质	PPO
Sealing material 密封材料	FKM & PTFE
Actuator rotation 执行器旋转角度	90°
Torque force 扭力	15 N.m
Cable Length 线长	0.5m ,1.5m (Optional)
Environment temperature 环境温度	-15℃~50℃
Liquid temperature 液体温度	2℃~90℃
Manual operation 手动操作	Yes
Open/close indicator 开关指示	Yes
Protection class 防护等级	IP67

T25-S3-B

Assemble Diagram 组装图

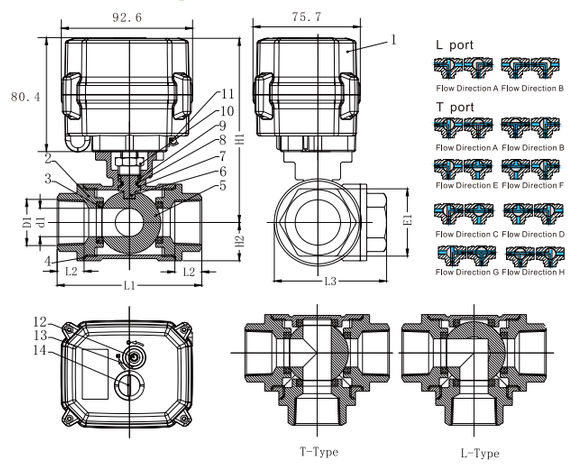

Components 组成

No.	Name	Material	Specification	Quantity
1	Actuator	PPO		1
2	Valve Body	Stainless Steel	304	1
3	Valve Seat	PTFE		4
4	Sealing Gasket	PTFE		3
5	Ball	Stainless Steel	304	1
6	Valve Stem	Stainless Steel	304	1
7	Gasket	PTFE		1
8	Oil-seal	FKM		1
9	Packing	PTFE		2
10	Packing Gland	Stainless Steel	304	1
11	Hexagon Wrench	Stainless Steel	303	1
12	Manual Shaft	Stainless Steel	303	1
13	Oil-seal	NBR		1
14	Indicator	PC		1

DESCRIPTION	D1	d1±0.3	L1±1	L2±1	E1±0.5	H1±1	H2	L3
15-S3-B	1/2"	12	70	18	25	118	18	53
20-S3-B	3/4"	15	79	20	31	122.4	21	60
25-S3-B	1"	18	86	20	38	131	23.5	68

本手册内容仅供参考，不作为使用时的判定依据，详细技术参数及印刷板图请登录我司网站查询：www.covna-valve.com

A150-T Series 2 Way 3-pieces SS304 Electric Ball Valve
A150-T系列两通三片式不锈钢电动球阀

Technical Parameters 技术参数:

Valve size 口径	NPT/BSP 1/2" 3/4" 1" 1 1/4" (Optional)
Connection standard 连接标准	ISO5211 F03、F05
Output axis specification 输出轴规格	11*11 9*9
Maximum working pressure 最大工作压力	1.6MPa
Circulation medium 介质	Fluid, air
Rated voltage 额定电压	DC12V DC24V AC24V DC12-24V AC110-230V (Optional)
Wiring diagram 接线图	CR201 CR202 CR301 CR303 CR305 CR306 CR501 CR502 CR702 CR703 CR705 CR706（Optional)
Working current 工作电流	≤1.5A
Open/close time 开关时间	≤12S
Life time 寿命	70000 times（testing pressure is 0.4MPa, medium is water)
Valve body material 阀材质	SS304 SS316（Optional)
Actuator material 执行器材质	PPO
Sealing material 密封材料	FKM & PTFE
Actuator rotation 执行器旋转角度	90°
Torque force 扭力	15 N.m
Cable Length 线长	0.5m ,1.5m（Optional)
Environment temperature 环境温度	-15℃～50℃
Liquid temperature 液体温度	2℃～90℃
Manual operation 手动操作	Yes
Open/close indicator 开关指示	Yes
Protection class 防护等级	IP67

T25-S23-B

Assemble Diagram 组装图

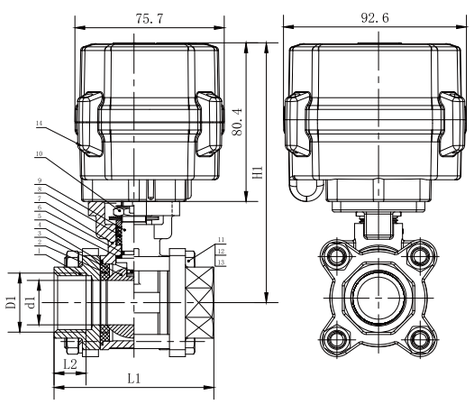

Components 组成

No.	Name	Material	Specification	Quantity
1	Bonnet	Stainless Steel	304	2
2	Valve Seat	PTFE		2
3	Ball	Stainless Steel	304	1
4	Sealing Gasket	PTFE		2
5	Gasket	PTFE		1
6	O-ring	FKM		1
7	Valve Body	Stainless Steel	304	1
8	Packing	PTFE		2
9	Valve Stem	Stainless Steel	304	1
10	Packing Gland	Stainless Steel	304	1
11	Bolt	Stainless Steel	304	4
12	Spring Washer	Stainless Steel	304	4
13	Nut	Stainless Steel	304	4
14	Actuator	PPO		1

DESCRIPTION	D1±0.5	d1±1	L1±1	L2±1	H1±1
15-S23-B	1/2"	15	68	14	123.4
20-S23-B	3/4"	20	80	16	127.4
25-S23-B	1"	25	87	17	136.4
32-S23-B	1 1/4"	32	100	18	140.4

科威納COVNA®

A150-T Series 2 Way Brass Electric Ball Valve
A150-T系列两通黄铜电动球阀

Technical Parameters 技术参数:

Valve size 口径	NPT/BSP 1 1/4" 1 1/2" 2" (Optional)
Connection standard 连接标准	ISO5211 F03、F05
Output axis specification 输出轴规格	11*11 9*9
Maximum working pressure 最大工作压力	1.0MPa
Circulation medium 介质	Fluid, air
Rated voltage 额定电压	DC12V DC24V AC24V DC12-24V AC110-230V (Optional)
Wiring diagram 接线图	CR201 CR202 CR301 CR303 CR305 CR306 CR501 CR502 CR702 CR703 CR705 CR706（Optional)
Working current 工作电流	≤1.5A
Open/close time 开关时间	≤12S
Life time 寿命	70000 times（testing pressure is 0.4MPa, medium is water)
Valve body material 阀材质	Brass
Actuator material 执行器材质	PPO
Sealing material 密封材料	FKM & PTFE
Actuator rotation 执行器旋转角度	90°
Torque force 扭力	15 N.m
Cable Length 线长	0.5m ,1.5m（Optional)
Environment temperature 环境温度	-15℃～50℃
Liquid temperature 液体温度	2℃～90℃
Manual operation 手动操作	Yes
Open/close indicator 开关指示	Yes
Protection class 防护等级	IP67

T50-B2-B

Assemble Diagram 组装图

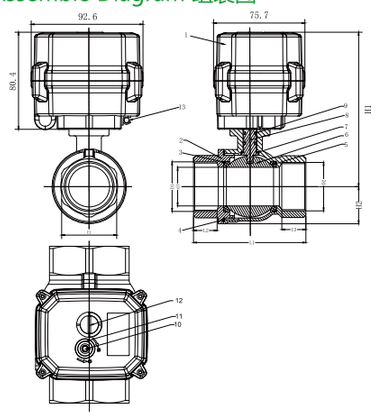

Components 组成

No.	Name	Material	Specification	Quantity
1	Actuator	PPO		1
2	Valve Body	Brass		1
3	O-ring	FKM		2
4	Sealing Gasket	PTFE		1
5	Valve Seat	PTFE		2
6	Ball	Stainless Steel	304	1
7	Gasket	PTFE		1
8	Valve Stem	Stainless Steel	304	1
9	O-ring	FKM		2
10	Screw x 4	Stainless Steel	303	1
11	Oil-seal	NBR		1
12	Indicator	PC		1
13	Hexagon Wrench	Stainless Steel	303	1

DESCRIPTION	D1/D2	d1±0.3	L1±1	L2/L3±1	E1±0.5	H1±1	H2
32-B2-B	1 1/4"	32	102	25	47	125.4	31
40-B2-B	1 1/2"	38	114	26	54	131.4	36
50-B2-B	2"	49	130	27	66	140.4	44.5

本手册内容仅供参考，不作为使用时的判定依据，详细技术参数及印刷板图请登录我司网站查询：www.covna-valve.com

A150-T Series SS304 Electric Butterfly Valve
A150-T系列不锈钢电动蝶阀

Technical Parameters 技术参数:

Valve size 口径	DN25 DN32 (Optional)
Connection standard 连接标准	ISO5211 F03、F05
Output axis specification输出轴规格	11*11 9*9
Maximum working pressure 最大工作压力	1.0MPa
Circulation medium 介质	Fluid, air
Rated voltage 额定电压	DC12V DC24V AC24V DC12-24V AC110-230V (Optional)
Wiring diagram 接线图	CR201 CR202 CR301 CR303 CR305 CR306 CR501 CR502 CR702 CR703 CR705 CR706（Optional）
Working current 工作电流	≤1.5A
Open/close time 开关时间	≤12S
Life time 寿命	70000 times（testing pressure is 0.4MPa, medium is water）
Valve body material 阀材质	SS304 SS316
Actuator material 执行器材质	PPO
Sealing material 密封材料	EPDM
Actuator rotation 执行器旋转角度	90°
Torque force 扭力	15 N.m
Cable Length 线长	0.5m ,1.5m（Optional）
Environment temperature 环境温度	-15℃～50℃
Liquid temperature 液体温度	0℃～80℃
Manual operation 手动操作	Yes
Open/close indicator 开关指示	Yes
Protection class 防护等级	IP67

A150-T

Assemble Diagram 组装图

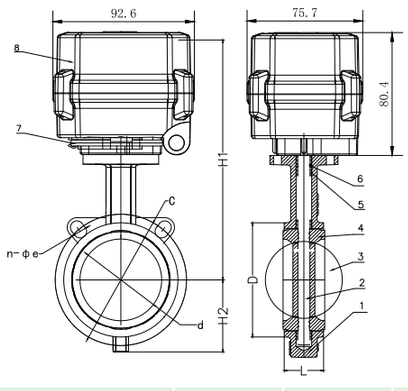

Components 组成

No.	Name	Material	Specification	Quantity
1	Valve Body	Stainless Steel	304	1
2	Valve Seat	EPDM		1
3	Valve Plate	Stainless Steel	304	1
4	Valve Shaft	416		1
5	Shaft Sleeve	EPDM		2
6	O-ring	EPDM		1
7	Hexagon Wrench	Stainless Steel	304	1
8	Actuator	PPO		1

DESCRIPTION	d±0.3	D±0.5	L±0.5	C±0.3	n-Φe	H2±0.5	H1±1
25/32-SD-B	38	72	31.5	101.5	2-18	49.8	159.4

科威納COVNA®

A150-T Series 2 Way SS304 Tri-clamp Electric Ball Valve
A150-T系列两通快装电动球阀

Technical Parameters 技术参数:

Valve size 口径	Φ19 Φ25 Φ32 Φ38 (Optional)
Connection standard 连接标准	ISO5211 F03、F05
Output axis specification输出轴规格	11*11 9*9
Maximum working pressure 最大工作压力	1.0MPa
Circulation medium 介质	Fluid, air
Rated voltage 额定电压	DC12V DC24V AC24V DC12-24V AC110-230V (Optional)
Wiring diagram 接线图	CR201 CR202 CR301 CR303 CR305 CR306 CR501 CR502 CR702 CR703 CR705 CR706（Optional）
Working current 工作电流	≤1.5A
Open/close time 开关时间	≤12S
Life time 寿命	70000 times（testing pressure is 0.4MPa, medium is water）
Valve body material 阀材质	SS304 SS316
Actuator material 执行器材质	PPO
Sealing material 密封材料	PTFE
Actuator rotation 执行器旋转角度	90°
Torque force 扭力	15 N.m
Cable Length 线长	0.5m ,1.5m（Optional）
Environment temperature 环境温度	-15℃～50℃
Liquid temperature 液体温度	2℃～90℃
Manual operation 手动操作	Yes
Open/close indicator 开关指示	Yes
Protection class 防护等级	IP67

A150-T

Assemble Diagram 组装图

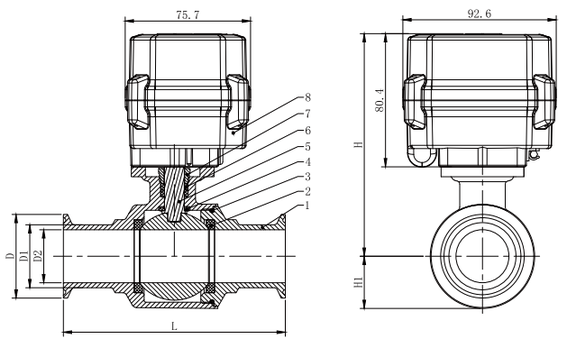

Components 组成

No.	Name	Material	Specification	Quantity
1	Valve Body	Stainless Steel	304	1
2	Valve Seat	PTFE		2
3	O-Ring	VMQ		1
4	Gasket	PTFE		1
5	Valve Stem	Stainless Steel	304	1
6	Packing	PTFE		2
7	Packing Gland	Stainless Steel	304	1
8	Actuator	PPO		1

DESCRIPTION	D	D1±0.3	D2±0.3	L±1	H±2	H1
38-S2-B	50.5	38	32	134	134.4	25.25
32-S2-B	50.5	32	28.5	120	129	25.25
25-S2-B	50.5	25	22	119	127.5	25.25
19-S2-B	50.5	19	15.5	99	121	25.25

A150-M Series 2 Way UPVC Modulating Electric Ball Valve
A150-M系列两通UPVC电动比例调节阀

Technical Parameters 技术参数:

Valve size 口径	NPT/BSP/No Thread Glued Type 1/2'' 3/4'' 1'' 1 1/4" 1 1/2" 2" (Optional)
Connection standard 连接标准	ISO5211 F03、F05
Output axis specification输出轴规格	11*11 9*9 (Optional)
Maximum working pressure 最大工作压力	1.0MPa
Circulation medium 介质	Fluid, air
Rated voltage 额定电压	DC12-24V
Input signal 输入信号	4-20mA 0-5V 0-10V 1-5V 2-10V RS485 (Optional)
Output signal输出信号	4-20mA 1-5V 0-10V 2-10V (Optional)
Working current 工作电流	≤1.5A
Open/close time 开关时间	≤12S
Life time 寿命	70000 times（testing pressure is 0.4MPa, medium is water)
Valve body material 阀材质	UPVC
Actuator material 执行器材质	PPO
Sealing material 密封材料	FKM/EPDM & PTFE
Torque force 扭力	15 N.m
Cable Length 线长	0.5m ,1.5m（Optional)
Environment temperature 环境温度	-15℃～50℃
Liquid temperature 液体温度	2℃～55℃
Manual operation 手动操作	Yes
Open/close indicator 开关指示	Yes
Protection class 防护等级	IP67

A150-M

Assemble Diagram 组装图

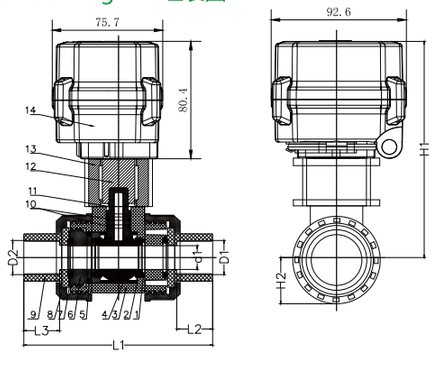

Components 组成

No.	Name	Material	Specification	Quantity
1	O-ring	EPDM/VITON		2
2	Valve Seat	PTFE		2
3	Valve Body	UPVC		1
4	Ball	UPVC		1
5	O-ring	EPDM/VITON		2
6	Bonnet	UPVC		2
7	O-ring	EPDM/VITON		2
8	Gland	UPVC		2
9	Socket	UPVC		2
10	O-ring	EPDM/VITON		2
11	Valve Stem	UPVC		1
12	Coupling	Stainless Steel	304	1
13	Holder	Stainless Steel	304	1
14	Actuator	PPO		1

DESCRIPTION	D1/D2	d1±0.3	L1±1	L2/L3±1	H1±1	H2	D1/D2			
15-P2-B	1/2"	15	107	22.3	136.7	27.5	21.54	20.30	22.4	22.40
20-P2-B	3/4"	20	115	25.5	141.2	32	26.87	25.30	26.45	26.40
25-P2-B	1"	25	129	28.6	156.25	37.25	33.65	32.30	32.55	34.50
32-P2-B	1 1/4''	32	144	32	162.4	42.75	42.42	40.30	38.60	42.50
40-P2-B	1 1/2''	40	161	35	174	50	48.56	50.30	48.70	48.60
50-P2-B	2''	50	173	38	194.4	60	60.63	63.30	60.80	60.60
							ANSI	DIN	JIS	CNS

科威納COVNA®

A150-M Series 2 Way SS304 Modulating Electric Ball Valve
A150-M系列两通不锈钢电动比例调节阀

Technical Parameters 技术参数:

Valve size 口径	NPT/BSP 1 1/4" 1 1/2" 2" (Optional)
Connection standard 连接标准	ISO5211 F03、F05
Output axis specification输出轴规格	11*11 9*9 (Optional)
Maximum working pressure 最大工作压力	1.0MPa
Circulation medium 介质	Fluid, air
Rated voltage 额定电压	DC12-24V
Input signal 输入信号	4-20mA 0-5V 0-10V 1-5V 2-10V RS485 (Optional)
Output signal输出信号	4-20mA 1-5V 0-10V 2-10V (Optional)
Working current 工作电流	≤1.5A
Open/close time 开关时间	≤12S
Life time 寿命	70000 times（testing pressure is 0.4MPa, medium is water)
Valve body material 阀材质	SS304 SS316（Optional)
Actuator material 执行器材质	PPO
Sealing material 密封材料	FKM & PTFE
Torque force 扭力	15 N.m
Cable Length 线长	0.5m ,1.5m（Optional)
Environment temperature 环境温度	-15℃～50℃
Liquid temperature 液体温度	2℃～90℃
Manual operation 手动操作	Yes
Open/close indicator 开关指示	Yes
Protection class 防护等级	IP67

A150-M

Assemble Diagram 组装图

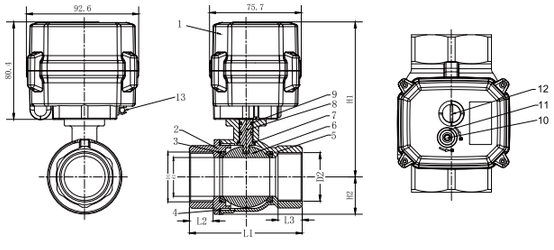

Components 组成

No.	Name	Material	Specification	Quantity
1	Actuator	PPO		1
2	Valve Body	Stainless Steel	304	1
3	O-ring	FKM		2
4	Sealing Gasket	PTFE		1
5	Valve Seat	PTFE		2
6	Ball	Stainless Steel	304	1
7	Gasket	PTFE		1
8	Valve Stem	Stainless Steel	304	1
9	O-ring	FKM		2
10	Manual Shaft	Stainless Steel	303	1
11	Oil-seal	NBR		1
12	Indicator	PC		1
13	Hexagon Wrench	Stainless Steel	303	1

DESCRIPTION	D1/D2	d1±0.3	L1±1	L2/L3±1	E1±0.5	H1±1	H2
32-S2-B	1 1/4''	32	102	25	47	125.4	31
40-S2-B	1 1/2''	38	114	26	54	132.4	36
50-S2-B	2''	49	130	27	66	140.4	44.5

A150-T Series 3 Way UPVC Electric Ball Valve
A150-T系列三通UPVC电动球阀

Technical Parameters 技术参数:

Valve size 口径	NPT/BSP/No Thread Glued Type 1/2" 3/4" 1" 1 1/4" 1 1/2" 2" (Optional)
Connection standard 连接标准	ISO5211 F03、F05
Output axis specification输出轴规格	11*11 9*9
Maximum working pressure 最大工作压力	1.0MPa
Circulation medium 介质	Fluid, air
Rated voltage 额定电压	DC12V DC24V AC24V DC12-24V AC110-230V (Optional)
Wiring diagram 接线图	CR201 CR202 CR301 CR303 CR305 CR306 CR501 CR502 CR702 CR703 CR706（Optional）
Working current 工作电流	≤1.5A
Open/close time 开关时间	≤12S
Life time 寿命	70000 times（testing pressure is 0.4MPa, medium is water）
Valve body material 阀材质	UPVC
Actuator material 执行器材质	PPO
Sealing material 密封材料	EPDM /FKM& PTFE
Actuator rotation 执行器旋转角度	90°
Torque force 扭力	15 N.m
Cable Length 线长	0.5m ,1.5m（Optional）
Environment temperature 环境温度	-15℃～50℃
Liquid temperature 液体温度	2℃～55℃
Manual operation 手动操作	Yes
Open/close indicator 开关指示	Yes
Protection class 防护等级	IP67

A150-T

Assemble Diagram 组装图

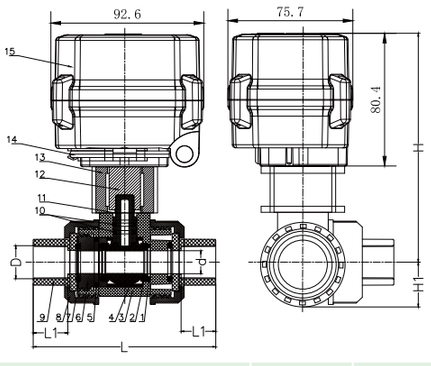

Components 组成

No.	Name	Material	Specification	Quantity
1	O-ring	EPDM		4
2	Valve Seat	PTFE		4
3	Valve Body	UPVC		1
4	Ball	CPVC		1
5	O-ring	EPDM		3
6	Bonnet	UPVC		3
7	O-ring	EPDM		3
8	Gland	UPVC		3
9	Socket	UPVC		3
10	O-ring	EPDM		2
11	Valve Stem	CPVC		1
12	Coupling	Stainless Steel	304	1
13	Holder	Stainless Steel	304	1
14	Hexagon Wrench	Stainless Steel	304	1
15	Actuator	PPO		1

DESCRIPTION	D1/D2	d±0.3	L±1	L1±1	H±1	H1
15-P3-B	1/2"	14	137	22	133.4	30
20-P3-B	3/4"	22	172	23	145.4	38.5
25-P3-B	1"	25	200	28	148.4	46
32-P3-B	1 1/4"	25	205	32	148.4	46
40-P3-B	1 1/2"	38	240	35	172.4	65
50-P3-B	2"	38	246	38	172.4	65

科威納COVNA®

A150-T Series 3 Way Tri-clamp Electric Ball Valve
A150-T系列三通快装电动阀

Technical Parameters 技术参数:

Valve size 口径	Ø19 Ø25 Ø32（Optional)
Connection standard 连接标准	ISO5211 F03、F05
Output axis specification输出轴规格	11*11 9*9
Maximum working pressure 最大工作压力	1.0MPa
Circulation medium 介质	Fluid, air
Rated voltage 额定电压	DC12V DC24V AC24V DC12-24V AC110-230V (Optional)
Wiring diagram 接线图	CR201 CR202 CR301 CR303 CR305 CR306 CR501 CR502 CR702 CR703 CR705 CR706（Optional）
Working current 工作电流	≤1.5A
Open/close time 开关时间	≤12S
Life time 寿命	70000 times（testing pressure is 0.4MPa, medium is water）
Valve body material 阀材质	SS304 SS316
Actuator material 执行器材质	PPO
Actuator rotation 执行器旋转角度	90°
Torque force 扭力	15 N.m
Cable Length 线长	0.5m ,1.5m（Optional）
Environment temperature 环境温度	-15℃～50℃
Liquid temperature 液体温度	2℃～90℃
Manual operation 手动操作	Yes
Open/close indicator 开关指示	Yes
Protection class 防护等级	IP67

A150-T

Assemble Diagram 组装图

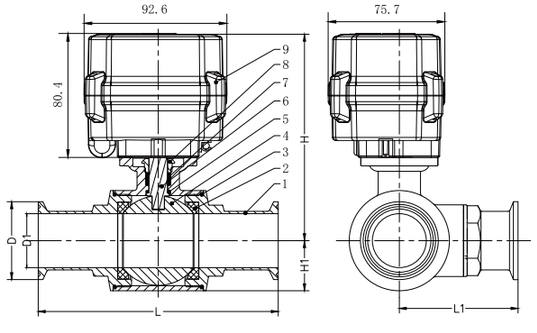

Components 组成

No.	Name	Material	Quantity
1	Valve Body	SS304	1
2	Valve Seat	PTFE	3
3	O-Ring	VMQ	3
4	Ball	SS304	1
5	Gasket	PTFE	1
6	Valve Stem	SS304	1
7	Packing	PTFE	2
8	Packing Gland	SS304	1
9	Actuator	PP0	1

L port

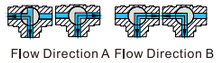

Flow Direction A Flow Direction B

T port

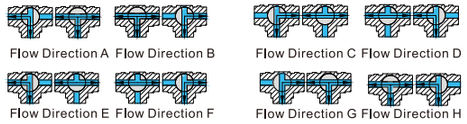

Flow Direction A Flow Direction B Flow Direction C Flow Direction D

Flow Direction E Flow Direction F Flow Direction G Flow Direction H

DESCRIPTION	D±0.3	D1±0.3	L±1	L1±1	H±1	H1
19-S3-B	50.5	15.5	108	55.5	121.9	25.25
25-S3-B	50.5	21.8	126	61.5	128.4	25.25
32-S3-B	50.5	28.8	136	67.5	129.9	28

B150-T Series Quick Open High Protection Moistureproof Electric Ball Valve
B150-T 系列快开高防护防潮开关型电动阀

Technical Parameters 技术参数:

Valve size 口径	NPT/BSP 2 way 1/2" 3/4" 1" 1 1/4" (Optional)
Connection standard 连接标准	ISO5211 F03 / F05
Output axis specification 输出轴规格	Male square 11*11
Maximum working pressure 最大工作压力	1.0MPa
Circulation medium 介质	Fluid, air
Rated voltage 额定电压	DC12V DC24V (Optional)
Wiring diagram 接线图	CR201 CR501 CR303 CR703 (Optional)
Working current 工作电流	≤2A (DC12V) ≤1A (DC24V)
*New Open/close time 开关时间	≤2S
Life time 寿命	50000 times (testing pressure is 0.4MPa, medium is water)
Valve body material 阀材质	SS304 SS316 (Optional)
Actuator material 执行器材质	PPO
Sealing material 密封材料	FKM & PTFE
Actuator rotation 执行器旋转角度	90°
Torque force 扭力	15 N.m
Cable specification 线规	UL 2464 22awg 0.5m 1.5m (Optional)
Environment temperature 环境温度	-15℃～50℃
Liquid temperature 液体温度	2℃～90℃
Manual operation 手动操作	Yes (Matching hex wrench, use in case of power failure)
Open/close indicator 开关指示	Yes
Locked-rotor current 堵转电流	5A (DC12V) 3.5A (DC24V)
*New Protection class 防护等级	IP68

B150-S23-B

Assemble Diagram 组装图

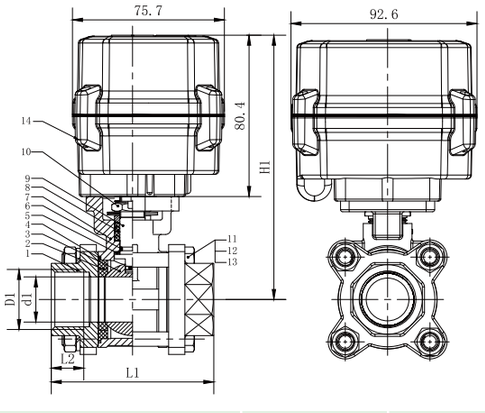

Components 组成

No.	Name	Material	Specification	Quantity
1	Bonnet	Stainless Steel	304	2
2	Valve Seat	PTFE		2
3	Ball	Stainless Steel	304	2
4	Sealing Gasket	PTFE		1
5	Gasket	PTFE		1
6	O-Ring	FKM		1
7	Valve Body	Stainless Steel	304	1
8	Packing	PTFE		2
9	Valve Stem	Stainless Steel	304	1
10	Packing Gland	Stainless Steel	304	1
11	Bolt	Stainless Steel	304	4
12	Spring Washer	Stainless Steel	304	4
13	Nut	Stainless Steel	304	4
14	Actuator	PPO		1

DESCRIPTION	D1±0.5	d1±1	L1±1	L2±1	H1±1
15-S23-B	1/2"	15	68	14	123.4
20-S23-B	3/4"	20	80	16	127.4
25-S23-B	1"	25	87	17	136.4
32-S23-B	1 1/4"	32	100	18	140.4

科威納COVNA®

A150-T Series 2 Way UPVC Electric Ball Valve
A150-T系列两通UPVC电动球阀

Technical Parameters 技术参数:

Valve size 口径	NPT/BSP/No Thread Glued Type 1/2" 3/4" 1" 1 1/4" 1 1/2" 2" (Optional)
Connection standard 连接标准	ISO5211 F03、F05
Output axis specification输出轴规格	11*11 9*9
Maximum working pressure 最大工作压力	1.0MPa
Circulation medium 介质	Fluid, air
Rated voltage 额定电压	DC12V DC24V AC24V DC12-24V AC110-230V (Optional)
Wiring diagram 接线图	CR201 CR202 CR301 CR303 CR305 CR306 CR501 CR502 CR702 CR703 CR705 CR706 (Optional)
Working current 工作电流	≤1.5A
Open/close time 开关时间	≤12S
Life time 寿命	70000 times (testing pressure is 0.4MPa, medium is water)
Valve body material 阀材质	UPVC
Actuator material 执行器材质	PPO
Sealing material 密封材料	FKM/EPDM & PTFE
Actuator rotation 执行器旋转角度	90°
Torque force 扭力	15 N.m
Cable Length 线长	0.5m ,1.5m (Optional)
Environment temperature 环境温度	-15℃～50℃
Liquid temperature 液体温度	2℃～55℃
Manual operation 手动操作	Yes
Open/close indicator 开关指示	Yes
Protection class 防护等级	IP67

T50-P2-B

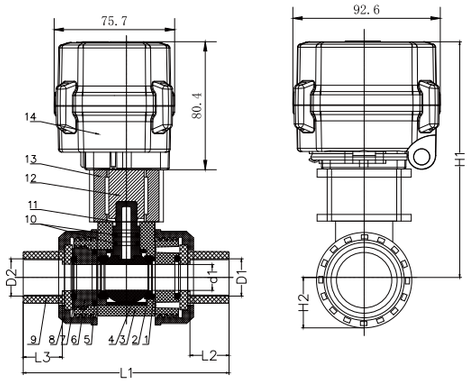

Components 组成

No.	Name	Material	Quantity
1	O-ring	EPDM/VITON	2
2	Valve Seat	PTFE	2
3	Valve Body	UPVC	1
4	Ball	UPVC	1
5	O-ring	EPDM/VITON	2
6	Bonnet	UPVC	2
7	O-ring	EPDM/VITON	2
8	Gland	UPVC	2
9	Socket	UPVC	2
10	O-ring	EPDM/VITON	2
11	Valve Stem	UPVC	1
12	Coupling	PA/304	1
13	Holder	PA/304	1
14	Actuator	PPO	1

DESCRIPTION	D1/D2	d1±0.3	L1±1	L2/L3±1	H1±1	H2	D1/D2			
15-P2-B	1/2"	15	107	22.3	136.7	27.5	21.54	20.30	22.4	22.40
20-P2-B	3/4"	20	115	25.5	141.2	32	26.87	25.30	26.45	26.40
25-P2-B	1"	25	129	28.6	156.25	37.25	33.65	32.30	32.55	34.50
32-P2-B	1 1/4"	32	144	32	162.4	42.75	42.42	40.30	38.60	42.50
40-P2-B	1 1/2"	40	161	35	174	50	48.56	50.30	48.70	48.60
50-P2-B	2"	50	173	38	194.4	60	60.63	63.30	60.80	60.60
							ANSI	DIN	JIS	CNS

本手册内容仅供参考，不作为使用时的判定依据，详细技术参数及印刷板图请登录我司网站查询：www.covna-valve.com

A150-T Series UPVC Electric Flange Valve
A150-T系列UPVC电动法兰阀

Technical Parameters 技术参数:

Valve size 口径	DN15 DN20 DN25 DN32 DN40 DN50 (Optional)
Connection standard 连接标准	ISO5211 F03、F05
Output axis specification输出轴规格	11*11 9*9
Maximum working pressure 最大工作压力	1.0MPa
Circulation medium 介质	Fluid, air
Rated voltage 额定电压	DC12V DC24V AC24V DC12-24V AC110-230V (Optional)
Wiring diagram 接线图	CR201 CR202 CR301 CR303 CR305 CR306 CR501 CR502 CR702 CR703 CR705 CR706（Optional）
Working current 工作电流	≤1.5A
Open/close time 开关时间	≤12S
Life time 寿命	70000 times（testing pressure is 0.4MPa, medium is water）
Valve body material 阀材质	UPVC
Actuator material 执行器材质	PPO
Sealing material 密封材料	EPDM/FKM &PTFE（Optional）
Actuator rotation 执行器旋转角度	90°
Torque force 扭力	15 N.m
Cable Length 线长	0.5m ,1.5m（Optional）
Environment temperature 环境温度	-15℃～50℃
Liquid temperature 液体温度	2℃～55℃
Manual operation 手动操作	Yes
Open/close indicator 开关指示	Yes
Protection class 防护等级	IP67

A150-T

Assemble Diagram 组装图

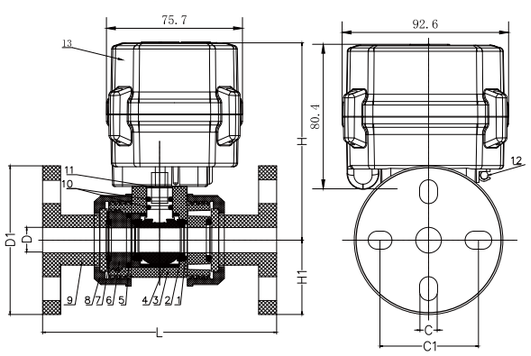

Components 组成

No.	Name	Material	Quantity
1	O-ring	EPDM/VITON	2
2	Gasket	PTFE	2
3	Valve Body	UPVC	1
4	Ball	UPVC	1
5	O-ring	EPDM/VITON	2
6	Bonnet	UPVC	2
7	O-ring	EPDM/VITON	2
8	Gland	UPVC	2
9	Socket	UPVC	2
10	O-ring	EPDM/VITON	2
11	Valve Stem	UPVC+ Stainless Steel	1
12	Hexagon Wrench	Stainless Steel	1
13	Actuator	PPO	1

DESCRIPTION	D±0.3	D1±0.3	L±1	C±0.3	C1±0.3	H±0.3	H1±1
15-P2-B	15	95	146	14	64	116	47.5
20-P2-B	20	104	163	14	71	124	52
25-P2-B	25	118	182	16	83	129	59
32-P2-B	32	139	194	16	93	138	69.5
40-P2-B	40	149	212	18	102	144.5	74.5
50-P2-B	50	164	241	18	122	156.5	82

科威納COVNA®

Water Leak Protection 防漏水控制器

Product Characteristic 产品特点

W15-B2-C

•外形小巧美观（87*71*29mm），便于安装。
Small and beautiful shape to install easily.
•电线采用防水快速接头，拆卸方便。
Using waterproof quick connection,disassemble easily.
•铜制金属感应器灵敏度高，快速检测漏水并及时关闭阀门。
Brass sensors with high sensitivity,rapid detection and closed valves in time.
•感应控制器全密封、防潮设计，提高了产品使用寿命。
Fully sealed and moisture-proof design,improve the product's life.
•控制器面板配有指示图标和手动按键，便于识别及操作（手动按键：电源键，开阀键，关阀键）。
Control panel is easy to operate with indicator icon and manual button.
•全金属齿轮结构设计，提升了电动球阀的质量。
Metal gears improve the quality of motorized valves.
*电池供电，电量不足自动报警。
Battery supply,auto alarm when power is lower.

Product Parameter产品参数

阀体口径：1/4" 3/8" 1/2" 3/4" 1" 1 1/4"
Valve Size：1/4" 3/8" 1/2" 3/4" 1" 1 1/4"
阀体材质：黄铜、铜镀镍、不锈钢
Valve Material：Brass,Nickel Plated Brass,SS304
工作电压：3VDC(2节AA，5号电池)
Working Voltage：3VDC(2AA 5# Battery)
开关时间：7S
Open/Closed Time：7S
承受压力：1.0MPa
Maximum Working Pressure：1.0MPa

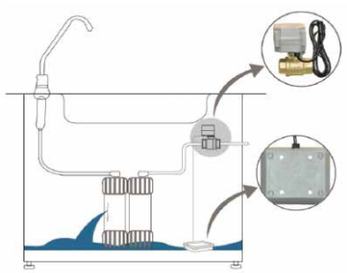

A550 Series 3 Way SS304 Tri-clamp Sanitary Electric Ball Valve
A550系列不锈钢三通快装卫生级电动球阀

Technical Parameters 技术参数:

Valve size 口径	DN38
Connection standard 连接标准	ISO5211, F05 F07
Output axis specification 输出轴规格	14*14mm
Maximum working pressure 最大介质压力	1.0MPa
Rated voltage 额定电压	DC12V DC24V AC24V AC220V（Optional）
Wiring diagram 接线图	CR201 CR501 CR202 CR502 CR301 CR602 CR303 CR603 CR306 CR606 CR302 CR601 4-20MA（Optional）
Open/close time 开关时间	≤15S
Life time 寿命	30000times（testing pressure is 0.4MPa, medium is water）
Actuator material 执行器材质	PPO
Torque force 扭力	50 N.m
Cable Length 线长	0.5m 1.5m（Optional）
Environment temperature 环境温度	-15℃～55℃
Liquid temperature 液体温度	2℃～90℃
Manual operation 手动操作	Yes
Open/close indicator 开关指示	Yes
Protection class 防护等级	IP67

A550-T38-S3-B

Assemble Diagram 组装图

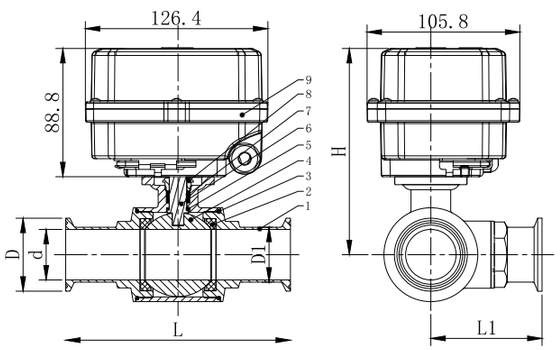

Components 组成

No.	Name	Material	Quantity
1	Valve Body	304	1
2	Valve Seat	PTFE	3
3	O-Ring	FKM	3
4	Ball	304	1
5	Gasket	PTFE	1
6	Valve Stem	304	1
7	Packing	PTFE	2
8	Packing Gland	304	1
9	Actuator	PPO	1

DESCRIPTION	D±0.5	D1±0.5	d±0.5	L±1	L1±1	H1±1
38-S3-B	50.5	38	35	156	110	143

科威納COVNA®

A550 Series 2 Way UPVC Electric Ball Valve
A550系列两通UPVC电动球阀

Technical Parameters 技术参数:

Valve size 口径	2'' 2 1/2'' 3''
Connection standard 连接标准	ISO5211, F05 F07
Output axis specification 输出轴规格	14*14mm
Maximum working pressure 最大介质压力	1.0MPa
Rated voltage 额定电压	DC12V DC24V AC24V AC220V（Optional）
Wiring diagram 接线图	CR201 CR501 CR202 CR502 CR301 CR602 CR303 CR603 CR306 CR606 CR302 CR601 4-20MA（Optional）
Open/close time 开关时间	≤15S
Life time 寿命	30000times（testing pressure is 0.4MPa, medium is water）
Actuator material 执行器材质	PPO
Torque force 扭力	50 N.m
Cable Length 线长	0.5m 1.5m（Optional）
Environment temperature 环境温度	-15℃～55℃
Liquid temperature 液体温度	2℃～55℃
Manual operation 手动操作	Yes
Open/close indicator 开关指示	Yes
Protection class 防护等级	IP67

A550-T80-P2-B

Assemble Diagram 组装图

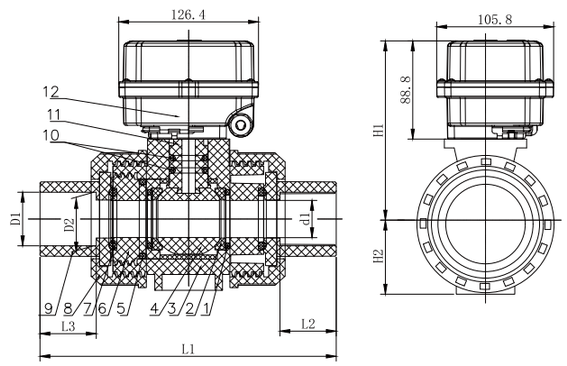

Components 组成

No.	Name	Material	Quantity
1	O-ring	EPDM/VITON	2
2	Valve Seat	PTFE	2
3	Valve body	UPVC	1
4	Ball	UPVC	1
5	O-ring	EPDM/VITON	2
6	Bonnet	UPVC	2
7	O-ring	EPDM/VITON	2
8	Gland	UPVC	2
9	Socket	UPVC	2
10	O-ring	EPDM/VITON	2
11	Valve Stem	UPVC	1
12	Actuator	PPO	1

DESCRIPTION	d1±0.3	L1±1	L2/L3±1	H1±1.5	H2	D1			
80-P2-B	75	271.5	70	282.3	88	89.31	90.3	89.6	89.7
65-P2-B	65	239	46	255.3	76.5	73.88	75.3	76.6	76.7
50-P2-B	50	173	38	213.3	60	60.63	63.6	60.8	60.6
						ANSI	DIN	JIS	CNS

D2			
89.31	90.3	89.6	89.7
73.38	75.3	76.6	76.7
60.63	63.3	60.8	60.6
ANSI	DIN	JIS	CNS

Wiring Diagram

■ CR201 Wiring Diagram (2 wires control)

·Red connect with positive, the Black connect with negative, the valve closed, the actuator automatically power off after in place , the valve remains fully closed position
·Black connect with positive, the Red connect with negative, the valve open, the actuator automatically power off after in place, the valve remains fully open position
- Suitable Working Voltage: DC5V, DC12V, DC24V
- Exceeding the working voltage is forbidden

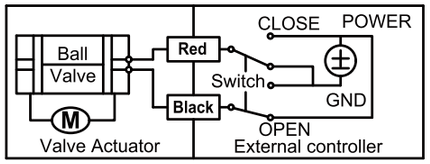

■ CR202 Wiring Diagram (2 wires control – Capacitors return in case of the power is failure)

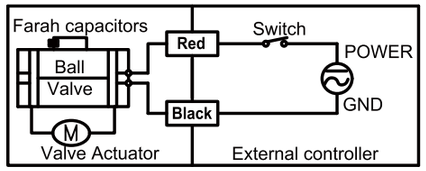

·When SW is closed , the valve OPEN. the actuator automatically power off after in place
·When SW is open, the valve CLOSED, the actuator automatically power off after in place
- Suitable Working Voltage: AC/DC9-24V,AC/DC9-35V,AC/DC110-230V
- Exceeding the working voltage is forbidden

■ CR301 Wiring Diagram (3 wires control)

·Red & Green connect with positive, Black connect with negative
·When OPEN(Red) & SW connected , the valve OPEN, the actuator automatically power off after in place , valve remains fully open position
·When CLOSE(Green) & SW connected, the valve CLOSED, the actuator automatically power off after in place, valve remains fully closed position
- Suitable Working Voltage: DC5V, DC12V, DC24V, AC/DC110-230V
- Exceeding the working voltage is forbidden

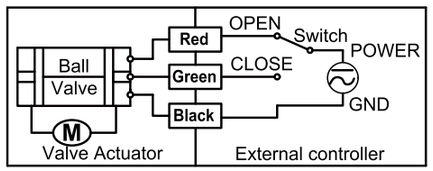

■ CR302 Wiring Diagram (3 wires control)

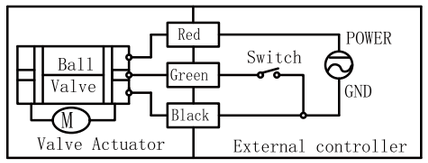

·Red connect with positive, the Black & Green connect with negative
·SW CLOSED, the valve OPEN, the actuator automatically power off after in place
·SW OPEN, the valve CLOSED, the actuator automatically power off after in place
- Suitable Working Voltage: AC24V，DC24V，DC9-35V
- Exceeding the working voltage is forbidden

■ CR303 Wiring Diagram (3 wires control)

·Red & Green connect with positive, the Black connect with negative
·SW CLOSED, the valve OPEN, the actuator automatically power off after in place
·SW OPEN, the valve CLOSED, the actuator automatically power off after in place
- Suitable Working Voltage: DC9-24V, AC/DC9-35V, AC/DC110-230V
- Exceeding the working voltage is forbidden

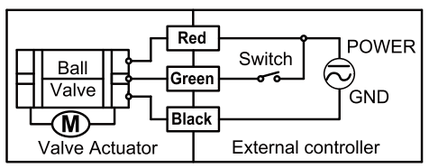

科威納COVNA®

■ CR305 Wiring Diagram (3 wires control – Capacitors return in case of the power is failure)

·Red & Green connect with positive, the Black connect with negative
·SW CLOSED, the valve OPEN, the actuator automatically power off after in place
·SW OPEN, the valve CLOSED, the actuator automatically power off after in place
When external power off, the valve CLOSED, the actuator automatically power off after in place
- Suitable Working Voltage: AC/DC9-24V，AC/DC110-230V
- Exceeding the working voltage is forbidden

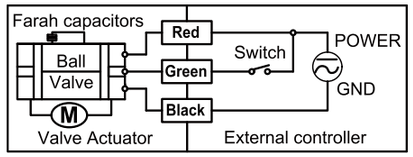

■ CR306 Wiring Diagram (3 wires control – Capacitors return in case of the power is failure)

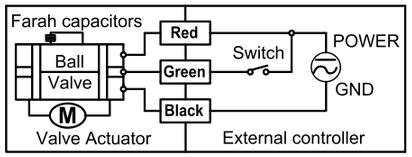

·Red & Green connect with positive, the Black connect with negative
·SW CLOSED, the valve OPEN, the actuator automatically power off after in place
·SW OPEN, the valve CLOSED, the actuator automatically power off after in place
When external power off, the valve OPEN, the actuator automatically power off after in place
- Suitable Working Voltage: AC/DC9-24V，AC/DC110-230V
- Exceeding the working voltage is forbidden

■ CR401 Wiring Diagram (4 wires control)

·Red & Black are connected to the power, Green & Yellow are connected to the controlled wiring
·When the SW is CLOSED , the valve OPEN
·When the SW is OPEN , the valve CLOSED Suitable Working Voltage:AC/DC110V-230V
Exceeding the working voltage is forbidden
The control wiring with power DC5V/DC24V, when muitiple motorized valves are working in paralled , must put the same color control wiring together, otherwise the valve could not working normally

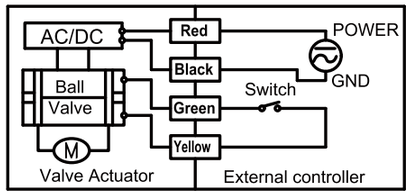

■ CR501 Wiring Diagram (5 wires control with feedback signal)

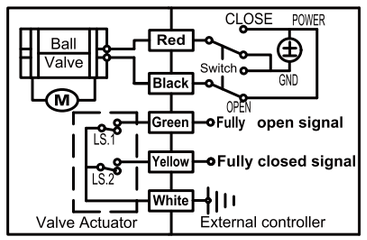

·Red connect with positive, the Black connect with negative, the valve closed, the actuator automatically power off after in place
·Black connect with positive, the Red connect with negative, the valve open, the actuator automatically power off after in place
·Green & White connect with the valve's fully open signal wiring
·Yellow & White connect with the valve's fully closed signal wiring
- Suitable Working Voltage:DC5V, DC12V, DC24V
- Exceeding the working voltage is forbidden
- Feedback signal load capacity:0.3A 24VACDC(resistive load)

■ CR502 Wiring Diagram (5 wires control - Capacitors return in case of the power is failure & feedback signal)

·When SW is closed , the valve OPEN. the actuator automatically power off after in place
·When SW is open, the valve CLOSED, the actuator automatically power off after in place
·Green & White connect with the valve's fully open signal wiring
·Yellow & White connect with the valve's fully closed signal wiring
- Suitable Working Voltage: AC/DC9-24V, AC/DC9-35V, AC/DC110-230V
- Exceeding the working voltage is forbidden
- Feedback signal load capacity:0.3A 24VACDC(resistive load)

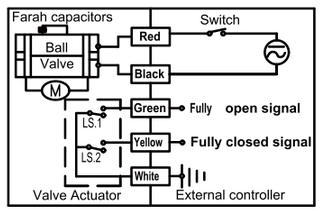

■ CR601 Wiring Diagram

Red connect with positive.
Green connect with Switch and negative wiring, Black connect with negative wiring.
SW open, the valve open, and keeping fully open.
SW closed, the valve closed, and keeping fully closed.
Blue & White connect with the valve's fully open signal wiring
Yellow & White connect with the valve's fully closed signal wiring.
＊Suitable Working Voltage: DC9-35V (wide input range voltage)
＊Exceeding the working voltage is forbidden
＊ Feedback with load ability：
① The Max. off voltage: AC24V，DC24V，DC9-35V
② The Max. off current: ≦0.4A

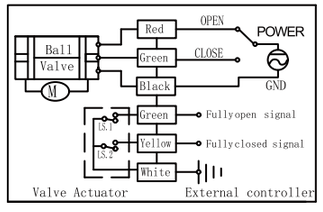

■ CR602 Wiring Diagram
(6 wires control with feedback signal)

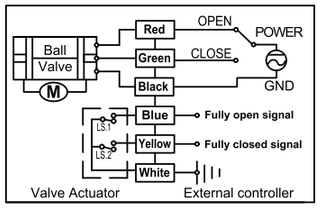

·Red & Green connect with positive, the Black connect with negative
·When Red & SW connected,the valve OPEN, the actuator automatically power off after the valve fully open
·When Green & SW connected, the valve CLOSED, the actuator automatically power off after the valve fully closed
·Blue & White connect with the valve's fully open signal wiring
·Yellow & White connect with the valve's fully closed signal wiring
• Suitable Working Voltage: DC5V, DC12V, DC24V, AC/DC110-230V
• Exceeding the working voltage is forbidden
• Feedback signal load capacity:0.3A 24VACDC(resistive load)

■ CR603 Wiring Diagram
(6 wires control with feedback signal)

Red & Green connect with positive, the Black connect with negative
·SW CLOSED, the valve OPEN, the actuator automatically power off after in place
·SW OPEN, the valve CLOSED, the actuator automatically power off after in place
·Blue & White connect with the valve's fully open signal wiring
·Yellow & White connect with the valve's fully closed signal wiring
• Suitable Working Voltage: DC9-24V，AC/DC9-35V，AC/DC110-230V
• Exceeding the working voltage is forbidden
• Feedback signal load capacity:0.3A 24VACDC(resistive load)

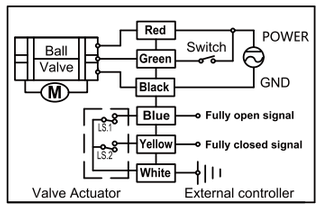

■ CR606 Wiring Diagram

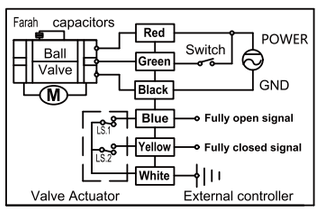

·Red & Green connect with positive, the Black connect with negative.
·Switch closed, the valve closed, the actuator automatically power off after in place.
·Switch open, the valve open, the actuator automatically power off after in place.
·When external power is off, the valve closed, the actuator automatically power off after in place.
·Blue & White connect with the valve's fully open signal wiring
·Yellow & White connect with the valve's fully closed signal wiring.
• Suitable Working Voltage: AC/DC9-24V, AC/DC110-230V
• Exceeding the working voltage is forbidden

科威納COVNA®

■ CR701 Wiring Diagram
(7 wires control with feedback signal)

·Red connect with positive
·Green connect with SW and negative wiring
·Black connect with negative wiring
.When SW close. the valve OPEN, and keeping fully open
.When SW open. the valve CLOSED, and keeping fully closed
.Blue & Grey connect with the valve's fully open signal wiring
.Yellow & White connect with the valve's fully closed signal wiring
• Suitable Working Voltage: AC24V，DC24V，DC9-35V
• Exceeding the working voltage is forbidden
• Feedback signal load capacity:0.3A 24VACDC(resistive load)

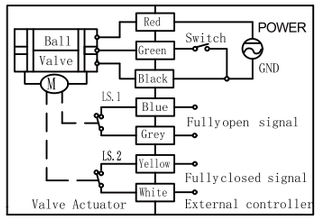

■ CR702 Wiring Diagram
(7 wires control with feedback signal)

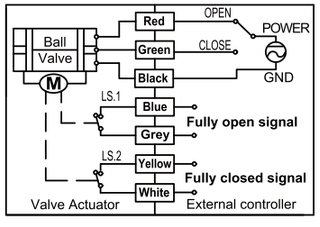

·Red & Green connect with positive, the Black connect with negative
·When Red & SW connected,the valve OPEN, the actuator automatically power off after the valve fully open
·When Green & SW connected, the valve CLOSED, the actuator automatically power off after the valve fully closed
·Blue & Grey connect with the valve's fully open signal wiring
·Yellow & White connect with the valve's fully closed signal wiring
• Suitable Working Voltage: DC5V, DC12V, DC24V, AC/DC110-230V
• Exceeding the working voltage is forbidden
• Feedback signal load capacity:0.3A 24VACDC(resistive load)

■ CR703 Wiring Diagram
(7 wires control with feedback signal)

·Red & Green connect with positive, the Black connect with negative
·SW CLOSED, the valve OPEN,the actuator automatically power off after in place
·SW OPEN, the valve CLOSED,the actuator automatically power off after in place
·Blue & Grey connect with the valve' s fully open signal wiring
·Yellow & White connect with the valve' s fully closed signal wiring
• Suitable Working Voltage: DC9-24V, AC/DC9-35V, AC/DC110-230V
• Exceeding the working voltage is forbidden
• Feedback signal load capacity:0.3A 24VACDC(resistive load)

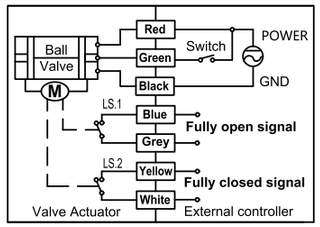

■ CR704 Wiring Diagram
(7 wires control with feedback signal)

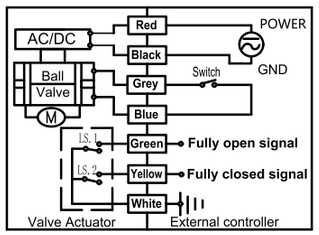

·Red & Black are connected to the power, Blue & Grey are connected to the controlled wiring
·When the SW is closed , the valve open
·When the SW is open , the valve closed
·Green & White connect with the valve's fully OPEN signal wiring
·Yellow & White connect with the valve's fully CLOSED signal wiring
• Suitable Working Voltage: AC/DC110V-230V
• Exceeding the working voltage is forbidden
• Feedback signal load capacity:0.3A 24VACDC(resistive load)

CR705 Wiring Diagram (7 wires control - Capacitors return in case of the power is failure & feedback signal)

·Red & Green connect with positive, the Black connect with negative
·SW CLOSED, the valve OPEN, the actuator automatically power off after in place
·SW OPEN, the valve CLOSED, the actuator automatically power off after in place
·When external power off, the valve **closed**, the actuator automatically power off after in place
·Blue & Grey connect with the valve's fully open signal wiring
·Yellow & White connect with the valve's fully closed signal wiring
• Suitable Working Voltage:AC/DC9-24V, AC/DC110-230V
• Exceeding the working voltage is forbidden
• Feedback signal load capacity:0.3A 24VACDC(resistive load)

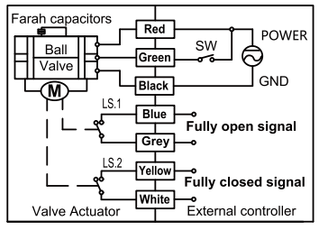

CR706 Wiring Diagram (7 wires control - Capacitors return in case of the power is failure & feedback signal)

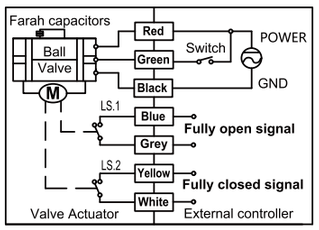

·Red & Green connect with positive, the Black connect with negative
·SW CLOSED, the valve OPEN, the actuator automatically power off after in place
·SW OPEN, the valve CLOSED, the actuator automatically power off after in place
·When external power off, the valve **open**, the actuator automatically power off after in place
·Blue & Grey connect with the valve's fully open signal wiring
·Yellow & White connect with the valve's fully closed signal wiring
• Suitable Working Voltage: AC/DC9-24V, AC/DC110-230V
• Exceeding the working voltage is forbidden
• Feedback signal load capacity:0.3A 24VACDC(resistive load)

CR707 Wiring Diagram

·Red connect positive,Black connect negative, valve turn to position 2 and hold
·Green connect positive,Black connect negative,valve turn to position 1 and hold
·Blue connect positive,Black connect negative,valve turn to position 3 and hold
·Grey and black valve position 2 Signal wire.
·Yellow and black valve position 1 Signal wire.
·White and black valve position 3 Signal wire.
• Suitable Working voltage: DC12V, DC24V
• Do not operate above voltage
• Feedback load capacity: 1、Maximum voltage DC36
2、Maximum current 0.4A

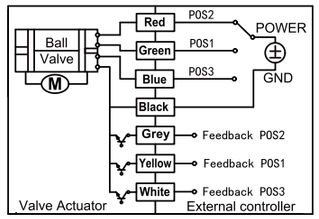

A150 Series Modulating Valve Wiring Diagram

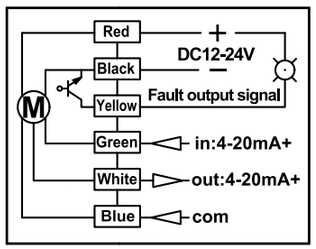

·Red connect +, Black -.
·Green connect input signal +(4-20mA, 0-5V, 0-10V) ,
Black connect input signal-.
·Yellow wire is the NPN wet contact signal output. It is connected to Black wire during normal operation. It is disconnected from black wire when Locked-rotor.
[It can be reversed if the user has special requirements]
·White connect 4-20mA output .
• Suitable Working Voltage: DC12-24V, AC110-230V